PUBLIC VERSION

UNITED STATES INTERNATIONAL TRADE COMMISSION
Washington, D.C.

In the Matter of CERTAIN ELECTRONIC DIGITAL MEDIA DEVICES AND COMPONENTS THEREOF	Inv. No. 337-TA-796

INITIAL DETERMINATION ON VIOLATION OF SECTION 337 AND RECOMMENDED DETERMINATION ON REMEDY AND BOND

Administrative Law Judge Thomas B. Pender
(October 24, 2012)

Appearances

For Complainant Apple, Inc.:

Alexander J. Hadjis, Esq., G. Brian Busey, Esq., and Kristin L. Yohannan, Esq. of Morrison & Foerster LLP of Washington, DC

Harold J. McElhinny, Esq., Michael A. Jacobs, Esq., Rachel Krevans, Esq. of Morrison & Foerster LLP of San Francisco, California

For Respondents Samsung Electronics. Co., Ltd., Samsung Electronics America, Inc., and Samsung Telecommunications America, LLC:

Charles K. Verhoeven, Esq. of Quinn Emanuel Urquhart & Sullivan, LLP of San Francisco, CA

Kevin P.B. Johnson, Esq., Victoria F. Maroulis, Esq. of Quinn Emanuel Urquhart & Sullivan, LLP of Redwood Shores, CA

Eric Huang, Esq. of Quinn Emanuel Urquhart & Sullivan, LLP of New York, NY

William Price, Esq., Robert J. Becher, Esq. of Quinn Emanuel Urquhart & Sullivan, LLP of Los Angeles, CA

Paul F. Brinkman, Esq., Alan L. Whitehurst, Esq., S. Alex Lasher, Esq. of Quinn Emanuel Urquhart & Sullivan, LLP of Washington, DC

Charles F. Schill, Esq. of Steptoe & Johnson LLP of Washington, DC

For The Office of Unfair Import Investigations:

Lynn I. Levine, Esq., Director; David O. Lloyd, Esq., Supervisory Attorney; Reginald D. Lucas, Esq., Investigative Attorney of Washington, DC

Table of Contents

I. Introduction 2
A. Procedural History 2
B. Parties 3
1. Complainant 3
2. Respondents 3
C. Patents at Issue 4
D. Products at Issue 4
1. Accused Products 4
2. Design Around Products 8
II. Importation or Sale 12
III. Jurisdiction 14
A. Subject Matter Jurisdiction 14
B. Personal Jurisdiction 15
C. In Rem Jurisdiction 15
IV. Standards of Law 15
A. Claim Construction 15
B. Infringement 18
1. Direct Infringement 18
2. Indirect Infringement 20
C. Validity 21
1. Anticipation 22
2. Obviousness 23
3. Written Description (35 U.S.C. §112) 24
4. Enablement 25
D. Domestic Industry 25
1. Economic Prong 26
2. Technical Prong 29
V. U.S. Patent No. D558,757 30
A. Introduction 30
B. Asserted Claims 30
C. Level of Ordinary Skill in the Art 31
D. Claim Construction 32
E. Infringement 37

1. Galaxy S 4G SGH-T959V and Vibrant SGH-T959 50
2. Mesmerize SCH-I500, Fascinate SCH-I500 and Showcase SCH-I500 55
3. Galaxy Player 4.0 YP-G1CWY 60
4. Galaxy Player 5.0 YP-G70/NAW 66
5. Transform SPH-M920 71
F. Validity of the D'757 Patent - Obviousness Under 35 U.S.C. § 103(a) 75
1. Japanese Design Patent JP D1250487 76
2. Korean Design Registration 30-0304213 80
G. Technical Prong of the Domestic Industry Requirement 81
VI. U.S Patent No. D618,678 88
A. Introduction 88
B. Asserted Claims 89
C. Level of Ordinary Skill in the Art 89
D. Claim Construction 90
E. Infringement of the D'678 Patent 95
1. The Galaxy S II (SGH-T989) 110
2. The Galaxy S 4G and Vibrant 114
3. The Galaxy SII (SGH-I777) 117
4. The Galaxy SII Epic 4G Touch 121
5. The Galaxy SII Skyrocket 124
6. The Mesmerize/Showcase/Fascinate 127
7. The Infuse 4G 130
8. The Focus S 133
9. The Galaxy Player 4.0 136
F. Validity of the D'678 Patent 139
1. Obviousness under 35 U.S.C. § 103 139
2. D'678 Patent Invalid – New Matter 146
G. Domestic Industry - "Technical Prong" 148
VII. U.S. Patent No. 7,479,949 154
A. Introduction 154
B. Asserted Claims 155
C. Level of Ordinary Skill in the Art 161
D. Claim Construction 161
1. "heuristics" 161

2. "one or more heuristics" 161
3. other claim terms 161
E. Infringement 162
1. Direct Infringement 162
2. Indirect Infringement 181
F. Technical Prong of the Domestic Industry Requirement 191
1. Do the domestic industry products determine a vertical screen scrolling command based on "initial movement"? 192
2. Do the domestic industry products employ heuristics for scrolling and a next item command? 193
G. Validity 194
1. Anticipation 194
2. Obviousness 206
3. Written Description 224
4. Enablement 227
VIII. U.S. Patent No. RE41,922 230
A. Introduction 230
B. Asserted Claims 230
C. Level of Ordinary Skill in the Art 232
D. Claim Construction 232
1. "image operation" 232
2. Other claim terms 232
E. Infringement 233
1. Direct Infringement 233
2. Indirect Infringement 262
F. Technical Prong of the Domestic Industry Requirement 272
G. Validity 274
1. Anticipation 274
2. Obviousness 303
IX. U.S. Patent No. 7,912,501 306
A. Introduction 306
B. Asserted Claims 307
C. Level of Ordinary Skill in the Art 308
D. Claim Construction 309

E. Infringement 309
1. Products employing GND-detection scheme and a comparator for microphone detection and switch activation events 311
2. Products employing a receptacle switch for plug detection, comparator for microphone detection, and dedicated comparator for switch activation event 319
3. Products employing a switch for plug detection, data converter for microphone detection, and dedicated comparator for switch activation events 330
4. Products employing L-detection, a data converter for microphone detection, and dedicated comparator for switch activation events 341
F. Technical Prong of the Domestic Industry Requirement 343
G. Validity 344
1. Anticipation 344
2. Obviousness 360
X. U.S. Patent No. 7,789,697 379
A. Introduction 379
B. Asserted Claims 380
C. Level of Ordinary Skill in the Art 381
D. Claim Construction 382
E. Infringement 382
1. Products employing GND-detection circuitry to detect the presence of a plug 384
2. Products employing L-detection circuitry to detect the presence of a plug 398
F. Technical Prong of the Domestic Industry Requirement 402
1. Do the iPhone 4 and iPad 2 "detect that the signal path is … a high impedance path"? 405
2. Do the iPhone 4 and iPad 2 include "detection circuitry coupled to the detect contact and the first receptacle contact"? 406
G. Validity 409
1. Anticipation 409
2. Obviousness 427
3. 35 U.S.C. § 112 443
XI. Economic Prong of the Domestic Industry Requirement 447
XII. Conclusions of Law 459
XIII. Initial Determination and Order 464

List of Abbreviations

CDX	Complainant's Demonstrative Exhibit
CIB	Complainant's Initial Post-Hearing Brief
CRB	Complainant's Reply Post-Hearing Brief
CX	Complainant's Exhibit
Depo.	Deposition
JX	Joint Exhibit
RDX	Respondent's Demonstrative Exhibit
RIB	Respondent's Initial Post-Hearing Brief
RRB	Respondent's Reply Post-Hearing Brief
RX	Respondent's Exhibit
Tr.	Transcript
DWS	Direct Witness Statement (Including Revised Direct Witness Statements)
RWS	Rebuttal Witness Statement

PUBLIC VERSION

UNITED STATES INTERNATIONAL TRADE COMMISSION
Washington, D.C.

In the Matter of CERTAIN ELECTRONIC DIGITAL MEDIA DEVICES AND COMPONENTS THEREOF	Inv. No. 337-TA-796

INITIAL DETERMINATION ON VIOLATION OF SECTION 337

Administrative Law Judge Thomas B. Pender

(October 24, 2012)

Pursuant to the Notice of Investigation and Rule 210.42(a) of the Rules of Practice and Procedure of the United States International Trade Commission, this is my Initial Determination in the matter of Certain Electronic Digital Media Devices and Components Thereof, Investigation No. 337-TA-796.

The Administrative Law Judge hereby determines that a violation of Section 337 of the Tariff Act of 1930, as amended, has been found in the importation into the United States, the sale for importation, or the sale within the United States after importation of certain electronic digital media devices and components thereof, in connection the claim of U.S. Patent No. D618,678; claims 1, 4-6, and 10-20 of U.S. Patent No. 7,479,949; claims 29, 30, and 33-35 of U.S. Patent No. RE41,922; and claims 1-4 and 8 of U.S. Patent No. 7,912,501.

The Administrative Law Judge hereby determines that no violation of Section 337 of the Tariff Act of 1930, as amended, has been found in the importation into the United States, the sale for importation, or the sale within the United States after importation of certain electronic digital media devices and components thereof, in connection with the claim of U.S. Patent No. D558,757; and claims 13 and 14 of U.S. Patent No. 7,789,697.

Furthermore, the Administrative Law Judge hereby determines that a domestic industry in the United States does exist that practices or exploits U.S. Patent Nos. D558,757; D618,678; 7,479,949; RE41,922; and 7,912,501, but that a domestic industry in the United States does not exist that practices or exploits U.S. Patent Nos. 7,789,697.

I. Introduction

A. Procedural History

On July 5, 2011, complainant Apple, Inc. ("Apple") filed a complaint with the Commission pursuant to Section 337 of the Tariff Act of 1930, as amended, 19 U.S.C. § 1337. The complaint named Samsung Electronics Co., Ltd. ("SEC"), Samsung Electronics America, Inc. ("SEA"), and Samsung Telecommunications America, LLC ("STA") (collectively, "Samsung") as Respondents.

By publication of notice in the Federal Register on August 5, 2011, the Commission instituted this investigation to determine whether there is a violation of Section 337(a)(1)(B) in the importation into the United States, the sale for importation, or the sale within the United States after importation of certain electronic digital media devices and components thereof that infringe one or more of claims 1, 3-6, and 9-20 of U.S. Patent No. 7,479,949 ("the '949 patent"); claims 29-35 of U.S. Patent No. RE41,922 ("the '922 patent"); claims 1, 4, 7, 9, 11, 12, 15-17, 19, and 20 of U.S. Patent No. 7,863,533 ("the '533 patent"); claims 1-3, 11-16, and 21-27 of U.S. Patent No. 7,789,697 ("the '697 patent"); claims 1-4 and 8 of U.S. Patent No. 7,912,501 ("the '501 patent"); the claim of U.S. Patent No. D558,757 ("the D'757 patent"); and the claim of U.S. Patent No. D618,678 ("the D'678 patent"), and whether an industry in the United States exists as required by Section 337(a)(2). *See* 76 Fed. Reg. 47610-11 (Aug. 5, 2011).

This investigation was originally assigned to Administrative Law Judge Bullock. *See* Aug. 2, 2011 Notice to the Parties. On October 24, 2011, this investigation was reassigned to me. (*See* Oct. 24, 2011, Notice to the Parties.)

A Markman hearing was held in this investigation from November 21-22, 2011. On March 6, 2012, Order No. 16 issued construing claim terms. *See* Order No. 16.

On May 3, 2012, Order No. 17 issued as an initial determination partially terminating this investigation with respect to all claims of the '533 patent, claims 1-3, 11, 12, 15, 16, and 21-27 of the '697 patent, and claim 3 of the '949 patent. The Commission determined not to review Order No. 17. *See* Comm'n Notice (May 3, 2012).

An evidentiary hearing was held in this investigation from May 31 – June 7, 2012.

B. Parties

1. Complainant

The Complainant named in this investigation is Apple, Inc. (*See* NOI.) Apple is a California corporation headquartered in Cupertino, California. Apple designs, manufactures, and markets personal computers, tablet devices, mobile communication device, and portable digital music and video players, and sells related software, services, peripherals, and networking solutions.

2. Respondents

The Respondents named in this investigation are Samsung Electronics Co., Ltd., Samsung Electronics America, Inc., and Samsung Telecommunications America, LLC. (*See* NOI.) Respondent Samsung Electronics Company, Ltd. is based in Suwon, Korea. Samsung Electronics America, Inc. is a wholly owned subsidiary of SEC. SEC is one of the largest

manufacturers of wireless communication devices in the world. SEC's subsidiary, Samsung Telecommunications America, LLC, was established in 1996 to perform activities in the United States relating to wireless communication services. STA is a Delaware limited liability company with a principal place of business in Richardson, Texas.

C. Patents at Issue

This investigation was instituted to determine whether there was a violation of Section 337 based on infringement of the '949, '922, '533, '697, '501, D'757, and D'678 patents. (*See* NOI.) Subsequent to the institution of this investigation, the '533 patent was terminated from this investigation. Thus, there remain at issue in this investigation the '949, '922, '697, '501, D'757, and D'678 patents.

D. Products at Issue

At issue in this investigation are certain electronic digital media devices and components thereof. 76 Fed. Reg. 47610-11.

1. Accused Products

Apple contends that the following Samsung products, which include mobile telephones, tablet computers, and media devices, infringe at least one claim of the asserted patents. The parties have entered into a stipulation regarding representative accused products. (Joint Stipulation Regarding Representative Accused Products, EDIS Document No. 480341(May 15, 2012).)

U.S. Patent No.	Accused Apple Products
7,479,949	*Products Running Android Version 2.2, 2.3, or 3.x* Acclaim SCH-R880, Admire SCH-R720, Captivate SGH-I897, Conquer 4G SPH-D600, Continuum SCH-I400, Dart SGH-T499, DoubleTime SGH-I857, Exhibit II 4G SGHT679, Exhibit SGH-T759, Fascinate SCHI500, Galaxy Ace S5830L, Galaxy Player 4 YP-G1CWY, Galaxy Player 5 YPG70C/NAW, Galaxy Prevail SPH-M820, Galaxy S 4G SGH-T959V, Galaxy S II SGHT989, Galaxy Tab 10.1 GT-P7510, Galaxy Tab 10.1 SGH-T859, Galaxy Tab 7 GT-P1010, Galaxy Tab 7 Plus GT-P6210, Galaxy Tab 7, SCH-I800, Galaxy Tab 7 SGH-I987, Galaxy Tab 7 SGH-T849, Galaxy Tab 7 SGH-T869, Galaxy Tab 7 SPH-P100, Galaxy Tab 8.9 GTP7310/M16, Galaxy Tab 8.9 SGH-I957, Gem SCH-I100, Gravity SGH-T589, Illusion SCHI110, Indulge SCH-R910, Infuse 4G SGHI997, Intercept SPH-M910, Mesmerize SCHI500, Nexus S GT-I9020, Nexus S GT-I9020A, Nexus S GT-I9020T, Nexus S SPH-D720, Precedent SCH-M828C, Repp SCH-R680, Showcase SCH-I500, Sidekick SGH-T839, Stratosphere SCH-I405, Transfix SCH-R730, Transform SPH-M920, Transform Ultra SPHM930, Vibrant SGH-T959, Vitality SCH-720 *Products Running Android Version 4.0* Galaxy Nexus GTI9250, Galaxy Nexus SCH-I515

U.S. Patent No.	Accused Apple Products
RE 41,922	Acclaim SCH-R880, Admire SCH-R720, Attain SCH-R920, Captivate Glide SGH-I927, Captivate SGH-I897, Conquer 4G SPH-D600, Continuum SCH-I400, Dart SGH-T499, DoubleTime SGH-I857, Droid Charge SCHI510, Epic 4G SPH-D700, Exhibit II 4G SGHT679, Exhibit SGH-T759, Fascinate SCHI500, Galaxy Ace S5830L, Galaxy Nexus GTI9250, Galaxy Nexus SCH-I515, Galaxy Player 4 YP-G1CWY, Galaxy Player 5 YPG70C/NAW, Galaxy Prevail SPH-M820, Galaxy S 4G SGH-T959V, Galaxy S II Epic 4G Touch SPH-D710, Galaxy S II SGH-I777, Galaxy S II SGH-T989, Galaxy S II Skyrocket SGH-I727, Galaxy Tab 10.1 GT-P7510, Galaxy Tab 10.1 SCH-I905, Galaxy Tab 10.1 SGH-T859, Galaxy Tab 7 GT-P1010, Galaxy Tab 7 Plus GT-P6210, Galaxy Tab 7 SCHI800, Galaxy Tab 7 SGH-I987, Galaxy Tab 7 SGH-T849, Galaxy Tab 7 SGH-T869, Galaxy Tab 7 SPH-P100, Galaxy Tab 8.9 GTP7310/ M16, Galaxy Tab 8.9 SGH-I957, Gem SCH-I100, Gravity SGH-T589, Illusion SCHI110, Indulge SCH-R910, Indulge SCH-R915, Infuse 4G SGH-I997, Intercept SPH-M910, Mesmerize SCH-I500, Nexus S GT-I9020, Nexus S GT-I9020A, Nexus S GT-I9020T, Nexus S SPH-D720, Note SGH-i717, Precedent SCH-M828C, Replenish SPHM580, Repp SCH-R680, Showcase SCH-I500, Sidekick SGH-T839, Stratosphere SCH-I405, Transfix SCH-R730, Transform SPH-M920, Transform Ultra SPH-M930, Vibrant SGHT959, Vitality SCH-720, Seek SPH-M350
D558,757	Galaxy S 4G (SGH-T959V), Mesmerize (SCH-I500), Fascinate (SCH-I500), Showcase (SCH-I500), Vibrant (SGH-T959), Transform (SPH-M920) Galaxy Player 4.0 (YP-G1CWY), Galaxy Player 5.0 (YP-G70C/NAW)
D618,678	Galaxy S 4G (SGH-T959V), Galaxy S II AT&T (SGH-I777), Galaxy S II TMobile (SGH-T989), Galaxy S II Epic 4G Touch (SPH-D710), Galaxy S II Skyrocket (SGH I727), Mesmerize (SCH-I500), Fascinate (SCH-I500), Showcase (SCH-I500), Vibrant (SGH-T959), Infuse 4G (SGH-I997), Focus S (SCH-I937), Galaxy Player 4.0 (YP-G1CWY)

U.S. Patent No.	Accused Apple Products
7,789,697	Admire SCH-R720, Conquer 4G SPH-D600, Continuum SCH-I400, Craft SCH-R900, DoubleTime SGH-I857, Exhibit SGH-T759, Fascinate SCH-I500, Flight II SGH-A927, Focus SGH-I917, Focus Flash SGH-I677, Focus S SGH-I937, Galaxy Nexus SCH-I515, Galaxy Player 4.0 YPG1CWY, Galaxy Player 5.0 YP-G70C/NAW, Galaxy Prevail SPH-M820, Galaxy S 4G SGHT959V, Galaxy S II Epic 4G Touch SPHD710, Galaxy S II SGH-I777, Galaxy S II SGH-T989, Galaxy S II Skyrocket SGH-I727, Galaxy Tab 7.0 SCH-I800, Galaxy Tab 7.0 SGH-T849, Galaxy Tab 7.0 SGH-T869, Galaxy Tab 7.0 SGH-I987, Galaxy Tab 7.0 SPH-P100, Galaxy Tab 7.0 GT-P1010/W16, Galaxy Tab 7.0 Plus GT-P6210, Galaxy Tab 8.9 SGH-I957, Galaxy Tab 8.9 GTP7310/M16, Galaxy Tab 10.1 SGH-T859, Galaxy Tab 10.1 SCH-I905, Galaxy Tab 10.1 GT-P7510/M16, Gravity SGH-T589, Illusion SCH-I110, Indulge SCH-R910, Indulge SCHR915, Infuse 4G SGH-I997, Mesmerize SCHI500, Nexus Prime GT-I9250, Nexus S GTI9020, Nexus S GT-I9020A, Nexus S GTI9020T, Nexus S SPH-D720, Note GTN7000/SGH-I717, Precedent SCH-M828C, Replenish SPH-M580, Repp SCH-R680, Showcase SCH-I500, Sidekick SGH-T839, Stratosphere SCH-I405, Transfix SCH-R730, Transform SPH-M920, Vibrant SGH-T959, Vitality SCH-720
7,912,501	Acclaim SCH-R880, Captivate SGH-I897, Conquer 4G SPH-D600, Continuum SCHI400, Craft SCH-R900, Droid Charge SCHI510, Epic 4G SPH-D700, Exhibit II 4G SGHT679, Exhibit 4G SGH-T759, Fascinate SCHI500, Focus SGH-I917, Focus Flash SGHI677, Focus S SGH-I937, Galaxy Ace S5830L, Galaxy Nexus SCH-I515, Galaxy Player 4.0 YP-G1CWY, Galaxy Player 5.0 YPG70C/NAW, Galaxy S 4G SGH-T959V, Galaxy S II Epic 4G Touch SPH-D710, Galaxy S II SGH-I777, Galaxy S II SGH-T989, Galaxy S II Skyrocket SGH-I727, Galaxy Tab 7.0 SCH-I800, Galaxy Tab 7.0 SGH-T849, Galaxy Tab 7.0 SGH-T869, Galaxy Tab 7.0 SGH-I987, Galaxy Tab 7.0 SPH-P100, Galaxy Tab 7.0 GT-P1010/W16, Galaxy Tab 7.0 Plus GT-P6210, Galaxy Tab 8.9 SGH-I957, Galaxy Tab 8.9 GT-P7310/M16, Galaxy Tab 10.1 SGH-T859, Galaxy Tab 10.1 SCH-I905, Galaxy Tab 10.1 GT-P7510/M16, Gravity SGH-T589, Illusion SCH-I110, Indulge SCHR910, Indulge SCH-R915, Infuse 4G SGHI997, Intercept SPH-M910, Mesmerize SCHI500, Messager SCH-R630, Messager Touch SCH-R631, Nexus Prime GT-I9250, Nexus S GT-I9020, Nexus S GT-I9020A, Nexus S GTI9020T, Nexus S SPH-D720, Note GTN7000/SGH-I717, Repp SCH-R680, Seek SPH-M350, Showcase SCH-I500, Sidekick SGH-T839, Stratosphere SCH-I405, Suede SCH-R710, Transform SPH-M920, Transform Ultra SPH-M930, Vibrant SGH-T959, Vitality SCH-720

2. Design Around Products

Samsung argues in its post-hearing briefs that Apple failed to prove that certain of its products, which it refers to as design around products, infringe the asserted claims of the '949, '922, '697, and '501 patents. Apple argues that it did not accuse those products of infringement and thus they are not at-issue in the investigation.

None of the parties, including Staff, adequately addressed this issue in its post-hearing briefing. Thus, on August 27, 2012, Order No. 25 issued seeking additional briefing discussing whether the design around products are at issue in this investigation and whether infringement of those products should be adjudicated as part of this investigation. (*See* Order No. 25 (August 27, 2012).)

Parties' Positions

Apple argues that while the NOI might encompass the non-accused products, the complainant's infringement contentions determine which products are accused. (CSupp at 1.) Apple argues that it did not assert infringement against Samsung's alleged design around products and thus did not address them in its expert witness statements. (*Id.*) Apple also asserts that it did not address the design-around products in its pre-hearing brief or post-hearing briefs. (*Id.* at 2.) Apple argues that any adjudication of whether the design-around products infringe the asserted patents would constitute an improper advisory opinion that is not provided for under the Commission Rules. (*Id.*) Apple also argues that I should reject Samsung's argument that any exclusion order issued should exempt its alleged design around products. (*Id.*) Apple argues that the Commission in Certain MEMS Devices and Products Containing the Same reversed the ALJ's decision to carve out non-accused processes from the exclusion order because the

complainant had not moved to terminate the investigation as to products made using such processes or to exclude them from the scope of any limited exclusion order and because the ALJ denied the respondents' summary determination motion. (*Id.*)

Samsung argues that its design around products for the '949, '697 and '501 patents are at issue and infringement by those designs should be adjudicated as part of this investigation. (RSupp at 1.) Samsung argues that the design around products are electronic devices within the scope of the investigation and that Apple had sufficient opportunity to conduct discovery in this area. (*Id.*) Samsung argues that Apple received timely discovery regarding the design around products and that its own experts analyzed them and in some cases opined on them in their expert reports. Samsung argues that simply because Apple chose to ignore the design around products in its briefing and at the hearing, after full discovery, cannot remove the design around products from the investigation. (*Id.* at 2.) Samsung argues that it expended considerable resources during the investigation and allocated valuable trial time to introduce and address these design around products. (*Id.* at 1.) Samsung argues that ignoring these products at this late stage would be prejudicial and a waste of valuable party and judicial resources should infringement of the design around products need to be re-addressed. (*Id.* at 1-2.)

The Staff argues that under Commission precedent, Samsung's design-around products are properly at issue in this investigation. (SSupp at 2.) In support, the Staff argues that in *Certain Flash Memory Circuits and Products Containing Same*, the Commission held that the ALJ should have made a determination as to whether Samsung's new designs infringe the patent-at-issue, noting that the record contained testimony by technical experts that the new designs are not infringing. (*Id.*) The Staff argues that here, Samsung witnesses provided testimony about

the '949, '697, and '501 design-around products. (*Id.* at 1.) The Staff also argues that Samsung expert witness Dr. van Dam testified regarding the '949 design around in his witness statement and that Apple expert witness Dr. Balakrishnan provided testimony regarding the '949 design around products at the evidentiary hearing. (*Id.* at 2.) Similarly, the Staff argues that Samsung expert Dr. Russ testified regarding the '697 and '501 design around products and that on cross-examination, Apple expert Dr. Phinney also testified about the '697 and '501 design around products. (*Id.*)

Analysis

The design around products are within the scope of the investigation as set forth in the NOI. The evidence shows that there was substantial discovery taken on the design around products. Indeed, the evidence shows that Apple inspected the design-around products as well as the relevant source code and took depositions of the relevant Samsung witnesses. (*See e.g.*, Dooju Byun (CX-2457C) and Kiyung Nam (CX-2507C).) Moreover, both Apple's and Samsung's experts testified at the evidentiary hearing regarding said products. (*See e.g.*, RX-3636C (van Dam RWS) at Q&A 504-505, 602; RX-3637C (Russ RWS) at Q&A 702, 703, 733, 739, 749; CX-3633C (Nam RWS) at Q&A 14-18; CX-2428C (Balakrishnan DWS) at Q&A 181; Balakrishnan Tr. at 1208:14-1209:13; Phinney Tr. at 930:16-931:13, 931:17-932:6.) The evidence also shows that the design around products are fixed and have been imported or sold in the United States. (RX-3636C (van Dam RWS) at Q&A 504, 602; RX-3637C (Russ RWS) at Q&A 733, 737; J.R. Lee Tr. 1705:4-7, 1723:22-1724:19, 1726:13-1728:1; RX-3452C; RX-3453C at 3; RX-3454C; RX-3005C; RX-2112C; CX-2507C (Nam Dep.) at 49:3-11, 58:5-15.)

Apple argues that because it did not accuse the design around products of infringing the asserted patents there is no need to determine whether they infringe the asserted patents. At the same time Apple argues that the design around products should not be carved out of any exclusion order that may issue in this investigation. Taken together, it would seem that Apple does not want the design patents adjudicated on the merits, but wants to still be able to argue that they fall within the scope of any exclusion order that may issue. I find Apple's position unimpressive.

The design around products are within the scope of this investigation, have been imported into the United States or sold in the United States, were the subject of extensive discovery as well as testimony during the evidentiary hearing in this investigation. Thus, I find that infringement of Samsung's design around products should be adjudicated as part of this Initial Determination. *See Certain Flash Memory Circuits and Products Containing Same*, 337-TA-382, Comm'n Op. (June 9, 1997).

A listing of Samsung's design around products, categorized by asserted patent, is shown in the chart below.

U.S. Patent No.	Design Around Products
7,479,949	Galaxy Tab 10.1 SCH-I905 (modified), Indulge SCH-R915, Epic 4G SPH-D700, Replenish SPH-M580, Galaxy Prevail SPH-M820, Galaxy Attain 4G SCH-R920, Galaxy S II Skyrocket SGH-I727, Galaxy S II SGH-I777, Captivate Glide SGH-I927, Galaxy S II Epic 4G Touch SPH-D710, Droid Charge SCH-I510, and Galaxy Note SCH-I717 Galaxy Tab GT-P7500

U.S. Patent No.	Design Around Products
RE41,922	Galaxy Tab 10.1 GT-P7510, Epic 4G SPH-D700, Replenish SPH-M580, Galaxy Prevail SPH-M820, Galaxy S II Skyrocket SGH-I727, Galaxy S II Epic 4G Touch SPH-D710, Droid Charge SCH-I510, and Galaxy Note SCH-I717
7,789,697	Droid Charge SCH-I510
7,912,501	Droid Charge SCH-I510

II. Importation or Sale

Samsung admits that it has imported or sold after importation in the United States the accused products in this investigation. (Joint Stipulation Regarding Importation, EDIS Document No. 480342 (May 15, 2012.); RIB at 14.)

On December 2, 2011, the Commission issued its opinion in *Certain Electronic Devices with Image Processing Systems, Components Thereof, and Associated Software*, Inv. No. 337-TA-724. ("*Electronic Devices with Image Processing Systems*"). The Commission stated in its opinion that "the ALJ's importation analysis must include an evaluation of whether the type of infringement alleged will support a finding that there has been an importation of an article that infringes in violation of section 337. *Electronic Devices with Image Processing Systems*, Inv. 337-TA-724, Comm'n Op. at 13, n. 8 (December 2, 2011). In particular, the Commission held that:

> [S]ection 337(a)(1)(B)(i) covers imported articles that directly or indirectly infringe when it refers to "articles that – infringe." We also interpret the phrase "articles that – infringe" to reference the status of the articles at the time of importation. Thus, infringement, direct or indirect, must be based on the articles as imported to satisfy the requirements of section 337.

Id. at 13-14. The Commission further held that "[w]e analyze a violation of section 337(a)(1)(B)(i) based on method claim[s] [] under the statutory rubrics of indirect infringement." *Id.* at 18. In that investigation, the Commission held that the complainant failed to show importation, sale for importation, or sale after importation of articles that infringe a method claim directly or indirectly. *Id.* at 18-19.

As set forth, *supra*, the accused products in this investigation include mobile phones, tablets, and other media devices. Apple alleges that the D'757 Accused Products directly infringe the claimed ornamental design shown and described in the D'757 patent. Apple's allegations of direct infringement of the claim of the D'757 patent would support a finding that there has been an importation of an article that infringes in violation of section 337. Apple alleges that the D'678 Accused Products directly infringe the claimed ornamental design shown and described in the D'678 patent. Apple's allegations of direct infringement of the claim of the D'678 patent would support a finding that there has been an importation of an article that infringes in violation of section 337.

Apple alleges that the '949 Accused Products directly infringe the asserted apparatus claims and both directly and indirectly infringe the asserted method claims. Apple's allegations of direct infringement of the apparatus claims of the '949 patent would support a finding that there has been an importation of an article that infringes in violation of section 337. Likewise, Apple's allegations of indirect infringement of the method claims of the '949 patent would support a finding that there has been an importation of an article that infringes in violation of section 337.

Apple alleges that the '922 Accused Products both directly and indirectly infringe the asserted method claims. Apple's allegations of indirect infringement of the method claims of the '922 patent would support a finding that there has been an importation of an article that infringes in violation of section 337.

Apple alleges that the '501 Accused Products directly infringe the asserted apparatus claims. Apple's allegations of direct infringement of the apparatus claims of the '501 patent would support a finding that there has been an importation of an article that infringes in violation of section 337.

Apple alleges that the '697 Accused Products directly infringe the asserted apparatus claims. Apple's allegations of direct infringement of the apparatus claims of the '697 patent would support a finding that there has been an importation of an article that infringes in violation of section 337.

III. Jurisdiction

In order to have the power to decide a case, a court or agency must have both subject matter jurisdiction and jurisdiction over either the parties or the property involved. 19 U.S.C. § 1337; *Certain Steel Rod Treating Apparatus and Components Thereof*, Inv. No. 337-TA-97, Commission Memorandum Opinion, 215 U.S.P.Q. 229, 231 (1981).

A. Subject Matter Jurisdiction

Section 337 confers subject matter jurisdiction on the International Trade Commission to investigate, and if appropriate, to provide a remedy for, unfair acts and unfair methods of competition in the importation, the sale for importation, or the sale after importation of articles into the United States. (*See* 19 U.S.C. §§ 1337(a)(1)(B) and (a)(2).) Apple alleges in the

Complaint that Samsung has violated Subsection 337(a)(1)(B) in the importation and sale of products that infringe the asserted patents. (*See* Complaint.) Samsung has stipulated that it either imports or sells after importation in the United States the accused products in this investigation. (RIB at 14.) Accordingly, I find the Commission has jurisdiction over this investigation under Section 337 of the Tariff Act of 1930. *Amgen, Inc. v. U.S. Int'l Trade Comm'n*, 902 F.2d 1532, 1536 (Fed. Cir. 1990).

B. Personal Jurisdiction

Samsung does not dispute that the Commission has personal jurisdiction over them. (*See* RIB at 14.) Samsung has fully participated in the investigation by, among other things, participating in discovery, participating in the hearing, and filing pre-hearing and post-hearing briefs. Accordingly, I find that Samsung has submitted to the jurisdiction of the Commission. *See Certain Miniature Hacksaws*, Inv. No. 337-TA-237, Pub. No. 1948, Initial Determination at 4, 1986 WL 379287 (U.S.I.T.C., October 15, 1986) (unreviewed by Commission in relevant part).

C. In Rem Jurisdiction

The Commission has in rem jurisdiction over the products at issue by virtue of the above finding that the accused products have been imported into the United States. *See Sealed Air Corp. v. United States Int'l Trade Comm'n*, 645 F.2d 976, 985 (C.C.P.A. 1981).

IV. Standards of Law

A. Claim Construction

"An infringement analysis entails two steps. The first step is determining the meaning and scope of the patent claims asserted to be infringed. The second step is comparing the

properly construed claims to the device accused of infringing." *Markman v. Westview Instruments, Inc.*, 52 F.3d 967, 976 (Fed. Cir. 1995) (*en banc*) (internal citations omitted), *aff'd*, 517 U.S. 370 (1996). Claim construction is a "matter of law exclusively for the court." *Id.* at 970-71. "The construction of claims is simply a way of elaborating the normally terse claim language in order to understand and explain, but not to change, the scope of the claims." *Embrex, Inc. v. Serv. Eng'g Corp.*, 216 F.3d 1343, 1347 (Fed. Cir. 2000).

Claim construction focuses on the intrinsic evidence, which consists of the claims themselves, the specification, and the prosecution history. *See Phillips v. AWH Corp.*, 415 F.3d 1303, 1314 (Fed. Cir. 2005) (*en banc*); *see also Markman*, 52 F.3d at 979. As the Federal Circuit in *Phillips* explained, courts must analyze each of these components to determine the "ordinary and customary meaning of a claim term" as understood by a person of ordinary skill in art at the time of the invention. 415 F.3d at 1313. "Such intrinsic evidence is the most significant source of the legally operative meaning of disputed claim language." *Bell Atl. Network Servs., Inc. v. Covad Commc'ns Grp., Inc.*, 262 F.3d 1258, 1267 (Fed. Cir. 2001).

"It is a 'bedrock principle' of patent law that 'the claims of a patent define the invention to which the patentee is entitled the right to exclude.'" *Phillips*, 415 F.3d at 1312 (quoting *Innova/Pure Water, Inc. v. Safari Water Filtration Sys., Inc.*, 381 F.3d 1111, 1115 (Fed. Cir. 2004)). "Quite apart from the written description and the prosecution history, the claims themselves provide substantial guidance as to the meaning of particular claims terms." *Id.* at 1314; *see also Interactive Gift Express, Inc. v. Compuserve Inc.*, 256 F.3d 1323, 1331 (Fed. Cir. 2001) ("In construing claims, the analytical focus must begin and remain centered on the language of the claims themselves, for it is that language that the patentee chose to use to

'particularly point [ ] out and distinctly claim [ ] the subject matter which the patentee regards as his invention."). The context in which a term is used in an asserted claim can be ""highly instructive." *Phillips*, 415 F.3d at 1314. Additionally, other claims in the same patent, asserted or unasserted, may also provide guidance as to the meaning of a claim term. *Id.*

The specification "is always highly relevant to the claim construction analysis. Usually it is dispositive; it is the single best guide to the meaning of a disputed term." *Id.* at 1315 (quoting *Vitronics Corp. v. Conceptronic, Inc.*, 90 F.3d 1576, 1582 (Fed. Cir. 1996)). "[T]he specification may reveal a special definition given to a claim term by the patentee that differs from the meaning it would otherwise possess. In such cases, the inventor's lexicography governs." *Id.* at 1316. "In other cases, the specification may reveal an intentional disclaimer, or disavowal, of claim scope by the inventor." *Id.* As a general rule, however, the particular examples or embodiments discussed in the specification are not to be read into the claims as limitations. *Id.* at 1323. In the end, "[t]he construction that stays true to the claim language and most naturally aligns with the patent's description of the invention will be ... the correct construction." *Id.* at 1316 (quoting *Renishaw PLC v. Marposs Societa' per Azioni*, 158 F.3d 1243, 1250 (Fed. Cir. 1998)).

In addition to the claims and the specification, the prosecution history should be examined, if in evidence. *Id.* at 1317; *see also Liebel-Flarsheim Co. v. Medrad, Inc.*, 358 F.3d 898, 913 (Fed. Cir. 2004). The prosecution history can "often inform the meaning of the claim language by demonstrating how the inventor understood the invention and whether the inventor limited the invention in the course of prosecution, making the claim scope narrower than it would otherwise be." *Phillips*, 415 F.3d at 1317; *see also Chimie v. PPG Indus. Inc.*, 402 F.3d

1371, 1384 (Fed. Cir. 2005) ("The purpose of consulting the prosecution history in construing a claim is to exclude any interpretation that was disclaimed during prosecution.").

When the intrinsic evidence does not establish the meaning of a claim, then extrinsic evidence (*i.e.*, all evidence external to the patent and the prosecution history, including dictionaries, inventor testimony, expert testimony, and learned treatises) may be considered. *Phillips*, 415 F.3d at 1317. Extrinsic evidence is generally viewed as less reliable than the patent itself and its prosecution history in determining how to define claim terms. *Id.* at 1317. "The court may receive extrinsic evidence to educate itself about the invention and the relevant technology, but the court may not use extrinsic evidence to arrive at a claim construction that is clearly at odds with the construction mandated by the intrinsic evidence." *Elkay Mfg. Co. v. Ebco Mfg. Co.*, 192 F.3d 973, 977 (Fed. Cir. 1999).

If, after a review of the intrinsic and extrinsic evidence, a claim term remains ambiguous, the claim should be construed so as to maintain its validity. *Phillips*, 415 F.3d at 1327. Claims, however, cannot be judicially rewritten in order to fulfill the axiom of preserving their validity. *See Rhine v. Casio, Inc.*, 183 F.3d 1342, 1345 (Fed. Cir. 1999). Thus, "if the only claim construction that is consistent with the claim's language and the written description renders the claim invalid, then the axiom does not apply and the claim is simply invalid." *Id.*

B. Infringement

1. Direct Infringement

A complainant must prove either literal infringement or infringement under the doctrine of equivalents. Infringement must be proven by a preponderance of the evidence. *SmithKline Diagnostics, Inc. v. Helena Labs. Corp.*, 859 F.2d 878, 889 (Fed. Cir. 1988). A preponderance

of the evidence standard "requires proving that infringement was more likely than not to have occurred." *Warner-Lambert Co. v. Teva Pharm. USA, Inc.*, 418 F.3d 1326, 1341 n.15 (Fed. Cir. 2005).

a. Literal Infringement

Literal infringement is a question of fact. *Finisar Corp. v. DirecTV Group, Inc.*, 523 F.3d 1323, 1332 (Fed. Cir. 2008). Literal infringement requires the patentee to prove that the accused device contains each and every limitation of the asserted claim(s). *Frank's Casing Crew & Rental Tools, Inc. v. Weatherford Int'l, Inc.*, 389 F.3d 1370, 1378 (Fed. Cir. 2004). If any claim limitation is absent, there is no literal infringement of that claim as a matter of law. *Bayer AG v. Elan Pharm. Research Corp.*, 212 F.3d 1241, 1247 (Fed. Cir. 2000.)

b. Doctrine of Equivalents

Where literal infringement is not found, infringement nevertheless can be found under the doctrine of equivalents. Determining infringement under the doctrine of equivalents "requires an intensely factual inquiry." *Vehicular Techs. Corp. v. Titan Wheel Int'l, Inc.*, 212 F.3d 1377, 1381 (Fed. Cir. 2000). According to the Federal Circuit:

> Infringement under the doctrine of equivalents may be found when the accused device contains an "insubstantial" change from the claimed invention. Whether equivalency exists may be determined based on the "insubstantial differences" test or based on the "triple identity" test, namely, whether the element of the accused device "performs substantially the same function in substantially the same way to obtain the same result." The essential inquiry is whether "the accused product or process contain elements identical or equivalent to each claimed element of the patented invention[.]"

TIP Sys., LLC v. Phillips & Brooks/Gladwin, Inc., 529 F.3d 1364, 1376-77 (Fed. Cir. 2008) (citations omitted). Thus, if an element is missing or not satisfied, infringement cannot be found

under the doctrine of equivalents as a matter of law. *London v. Carson Pirie Scott & Co.*, 946 F.2d 1534, 1538-39 (Fed. Cir. 1991).

2. Indirect Infringement

a. Inducement

Section 271(b) of the Patent Act prohibits inducement: "[w]hoever actively induces infringement of a patent shall be liable as an infringer." 35 U.S.C. § 271(b). As the Federal Circuit stated:

> To establish liability under section 271(b), a patent holder must prove that once the defendants knew of the patent, they "actively and knowingly aid[ed] and abett[ed] another's direct infringement." However, "knowledge of the acts alleged to constitute infringement" is not enough. The "mere knowledge of possible infringement by others does not amount to inducement; specific intent and action to induce infringement must be proven."

DSU Med. Corp. v. JMS Co., 471 F.3d 1293, 1305 (Fed. Cir. 2006) (en banc) (citations omitted); *See also Cross Medical Products, Inc. v. Medtronic Sofamor Danek, Inc.*, 424 F.3d 1293, 1312 (Fed. Cir. 2005) ("In order to succeed on a claim inducement, the patentee must show, first that there has been direct infringement, and second, that the alleged infringer knowingly induced infringement and possessed specific intent to encourage another's infringement."). Mere knowledge of possible infringement by others does not amount to inducement. Specific intent and action to induce infringement must be proven. *Warner-Lambert Co. v. Apotex Corp.*, 316 F.3d 1348, 1363 (Fed. Cir. 2003). In DSU, the Federal Circuit clarified the intent requirement necessary to prove inducement. As the court recently explained:

> In *DSU Med. Corp. v. JMS Co.*, this court clarified en banc that the specific intent necessary to induce infringement "requires more than just intent to cause the acts that produce direct infringement. Beyond that threshold knowledge, the inducer must have an affirmative intent to cause direct infringement."

Kyocera Wireless Corp. v. Int'l Trade Comm'n, 545 F.3d 1340, 1354, (Fed. Cir. 2008) (citation omitted). "Proof of inducing infringement requires the establishment of a high level of specific intent." *Lucent Techs. Inc. v. Gateway, Inc.*, 2007 WL 925510, at *2-3 (S.D. Cal. 2007).

b. Contributory Infringement

Section 271(c) of the Patent Act provides:

> Whoever offers to sell or sells within the United States or imports into the United States a component of a patented machine, manufacture, combination, or composition, or a material or apparatus for use in practicing a patented process, constituting a material part of the invention, knowing the same to be especially made or especially adapted for use in an infringement of such patent, and not a staple article or commodity of commerce suitable for substantial noninfringing use, shall be liable as a contributory infringer.

35 U.S.C. § 271(c). "Under 35 U.S.C. § 271(c), a party who sells a component with knowledge that the component is especially designed for use in a patented invention, and is not a staple article of commerce suitable for substantial noninfringing use, is liable as a contributory infringer." *Wordtech Sys., Inc. v. Integrated Networks Solutions, Inc.*, 609 F.3d 1308, 1316 (Fed. Cir. 2010). "[N]on-infringing uses are substantial when they are not unusual, far-fetched, illusory, impractical, occasional, aberrant, or experimental." *Vita–Mix Corp. v. Basic Holding, Inc.*, 581 F.3d 1317, 1327 (Fed. Cir. 2009). In assessing whether a use is substantial, the fact-finder may consider "the use's frequency, ... the use's practicality, the invention's intended purpose, and the intended market." *i4i Ltd. P'ship v. Microsoft Corp.*, 598 F.3d 831, 851 (Fed. Cir. 2010).

C. Validity

It is Respondents' burden to prove invalidity, and the burden of proof never shifts to the patentee to prove validity. *Scanner Techs. Corp. v. ICOS Vision Sys. Corp. N.V.*, 528 F.3d 1365,

1380 (Fed. Cir. 2008). "Under the patent statutes, a patent enjoys a presumption of validity, see 35 U.S.C. § 282, which can be overcome only through facts supported by clear and convincing evidence[.]" *SRAM Corp. v. AD-II Eng'g, Inc.*, 465 F.3d 1351, 1357 (Fed. Cir. 2006).

The clear and convincing evidence standard placed on the party asserting the invalidity defense requires a level of proof beyond the preponderance of the evidence. Although not susceptible to precise definition, "clear and convincing" evidence has been described as evidence which produces in the mind of the trier of fact "an abiding conviction that the truth of a factual contention is 'highly probable.'" *Price v. Symsek*, 988 F.2d 1187, 1191 (Fed. Cir. 1993) (citing *Buildex, Inc. v. Kason Indus., Inc.*, 849 F.2d 1461, 1463 (Fed. Cir. 1988).)

"When no prior art other than that which was considered by the PTO examiner is relied on by the attacker, he has the added burden of overcoming the deference that is due to a qualified government agency presumed to have properly done its job[.]" *Am. Hoist & Derrick Co. v. Sowa & Sons, Inc.*, 725 F.2d 1350, 1359 (Fed. Cir. 1984). Therefore, the challenger's "burden is especially difficult when the prior art was before the PTO examiner during prosecution of the application." *Hewlett-Packard Co. v. Bausch & Lomb Inc.*, 909 F.2d 1464, 1467 (Fed. Cir. 1990).

1. Anticipation

"A patent is invalid for anticipation if a single prior art reference discloses each and every limitation of the claimed invention. Moreover, a prior art reference may anticipate without disclosing a feature of the claimed invention if that missing characteristic is necessarily present, or inherent, in the single anticipating reference." *Schering Corp. v. Geneva Pharm., Inc.*, 339 F.3d 1373, 1377 (Fed. Cir. 2003) (citations omitted). "Inherency, however, may not be

established by probabilities or possibilities. The mere fact that a certain thing may result from a given set of circumstances is not sufficient." *Continental Can Company USA v. Monsanto Company,* 948 F.2d 1264, 1269 (Fed.Cir.1991). To be considered anticipatory, a prior art reference must describe the applicant's "claimed invention sufficiently to have placed it in possession of a person of ordinary skill in the field of the invention." *Helifix Ltd. v. Blok-Lok, Ltd.*, 208 F.3d 1339, 1346 (Fed. Cir. 2000) (quoting *In re Paulsen,* 30 F.3d 1475, 1479 (Fed. Cir. 1994)). Anticipation is a question of fact. *Texas Instruments, Inc. v. U.S. Int'l Trade Comm'n,* 988 F.2d 1165, 1177 (Fed. Cir. 1993).

2. Obviousness

Under 35 U.S.C. § 103(a), a patent is valid unless "the differences between the subject matter sought to be patented and the prior art are such that the subject matter as a whole would have been obvious at the time the invention was made to a person having ordinary skill in the art to which said subject matter pertains." 35 U.S.C. § 103(a). The ultimate question of obviousness is a question of law, but "it is well understood that there are factual issues underlying the ultimate obviousness decision." *Richardson-Vicks Inc. v. Upjohn Co.*, 122 F.3d 1476, 1479 (Fed. Cir. 1997); *Wang Lab., Inc. v. Toshiba Corp.*, 993 F.2d 858, 863 (Fed. Cir. 1993). The underlying factual determinations include: (1) the scope and content of the prior art, (2) the level of ordinary skill in the art, (3) the differences between the claimed invention and the prior art, and (4) objective indicia of non-obviousness. *Graham v. John Deere Co.*, 383 U.S. 1, 17 (1966).

Although the Federal Circuit has historically required that, in order to prove obviousness, the patent challenger must demonstrate, by clear and convincing evidence, that there is a

"teaching, suggestion, or motivation to combine," the Supreme Court has rejected this "rigid approach." *KSR Int'l Co. v. Teleflex Inc.*, 550 U.S. 398, 417-418 (2007). In KSR, the Supreme Court described a more flexible analysis:

> Often, it will be necessary for a court to look to interrelated teachings of multiple patents; the effects of demands known to the design community or present in the marketplace; and the background knowledge possessed by a person having ordinary skill in the art, all in order to determine whether there was an apparent reason to combine the known elements in the fashion claimed by the patent at issue... As our precedents make clear, however, the analysis need not seek out precise teachings directed to the specific subject matter of the challenged claim, for a court can take account of the inferences and creative steps that a person of ordinary skill in the art would employ.

Id. Since KSR was decided, the Federal Circuit has announced that, where a patent challenger contends that a patent is invalid for obviousness based on a combination of prior art references, "the burden falls on the patent challenger to show by clear and convincing evidence that a person of ordinary skill in the art would have had reason to attempt to make the composition or device, . . . and would have had a reasonable expectation of success in doing so." *PharmaStem Therapeutics, Inc. v. Viacell, Inc.*, 491 F.3d 1342, 1360 (Fed. Cir. 2007).

3. Written Description (35 U.S.C. §112)

The hallmark of the written description requirement is the disclosure of the invention. *Ariad Pharm., Inc. v. Eli Lilly and Co.,* 598 F.3d 1336, 1351 (Fed. Cir. 2010) (en banc). The test for determining the sufficiency of the written description in a patent requires "an objective inquiry into the four comers of the specification from the perspective of a person of ordinary skill in the art. Based on that inquiry, the specification must describe an invention understandable to that skilled artisan and show that the inventor actually invented the invention claimed." *Id.* Compliance with the written description requirement is a question of fact and "the level of detail

required to satisfy the written description requirement varies depending on the nature and scope of the claims and on the complexity and predictability of the relevant technology." *Id.*

4. Enablement

Thirty-five U.S.C. § 112 sets forth the enablement requirement:

> [t]he specification shall contain a written description of the invention, and the manner and process of making and using it, in such full, clear, concise, and exact terms as to enable any person skilled in the art to which it pertains, or with which it is most nearly connected, to make and use the same.

35 U.S.C. § 112, ¶ 1. "To be enabling, the specification of a patent must teach those skilled in the art how to make and use the full scope of the claimed invention without 'undue experimentation.'" *Genentech, Inc. v. Novo Nordisk, A/S*, 108 F.3d 1361, 1365 (Fed.Cir.1997) (quoting *In re Wright*, 999 F.2d 1557, 1561 (Fed. Cir. 1993)). Enablement serves the dual function in the patent system of ensuring adequate disclosure of the claimed invention and of preventing claims broader than the disclosed invention. *MagSil Corp. v. Hitachi Global Storage Technologies, Inc.*, 687 F.3d 1377, 1380 -1381 (Fed. Cir. 2012). "The scope of the claims must be less than or equal to the scope of the enablement to ensure that the public knowledge is enriched by the patent specification to a degree at least commensurate with the scope of the claims." *Sitrick v. Dreamworks*, LLC, 516 F.3d 993, 999 (Fed. Cir. 2008) (quoting *Nat'l Recovery Techs., Inc. v. Magnetic Separation Sys., Inc.*, 166 F.3d 1190, 1195-96 (Fed. Cir. 1999). The enablement determination proceeds as of the effective filing date of the patent. *Plant Genetic Sys., N.V. v. DeKalb Genetics Corp.*, 315 F.3d 1335, 1339 (Fed. Cir. 2003).

D. Domestic Industry

In a patent-based complaint, a violation of section 337 can be found "only if an industry in the United States, relating to the articles protected by the patent ... concerned, exists or is in

the process of being established." 19 U.S.C. § 1337(a)(2). Under Commission precedent, this "domestic industry requirement" of section 337 consists of an economic prong and a technical prong. *Certain Stringed Musical Instruments and Components Thereof*, Inv. No. 337-TA-586, Comm'n Op. at 12-14, 2009 WL 5134139 (U.S.I.T.C. Dec. 2009). The complainant bears the burden of establishing that the domestic industry requirement is satisfied. *See Certain Set-Top Boxes and Components Thereof*, Inv. No. 337-TA-454, Final Initial Determination at 294, 2002 WL 31556392 (U.S.I.T.C. June 21, 2002) (unreviewed by Commission in relevant part).

1. Economic Prong

The economic prong of the domestic industry requirement is defined in subsection 337(a)(3) as follows:

> (3) For purposes of paragraph (2), an industry in the United States shall be considered to exist if there is in the United States, with respect to the articles protected by the patent, copyright, trademark or mask work concerned --
>
> (A) Significant investment in plant and equipment;
>
> (B) Significant employment of labor or capital; or
>
> (C) Substantial investment in its exploitation, including engineering, research and development, or licensing.

19 U.S.C. § 1337(a)(3). The economic prong of the domestic industry requirement is satisfied by meeting the criteria of any one of the three factors listed above.

Section 337(a)(3)(C) provides for domestic industry based on "substantial investment" in the enumerated activities, including licensing of a patent. *See Certain Digital Processors and Digital Processing Systems, Components Thereof, and Products Containing Same*, Inv. No. 337-TA-559, Initial Determination at 88 (May 11, 2007) ("Certain Digital Processors"). Mere ownership of the patent is insufficient to satisfy the domestic industry requirement. *Certain*

Digital Processors at 93 (citing the Senate and House Reports on the Omnibus Trade and Competitiveness Act of 1988, S.Rep. No. 71). However, entities that are actively engaged in licensing their patents in the United States can meet the domestic industry requirement. *Certain Digital Processors* at 93. In establishing a domestic industry under Section 337(a)(3)(C), the complainant does not need to show that it or one of its licensees is practicing a patent-in-suit. *See Certain Semiconductor Chips with Minimized Chip Package Size and Products Containing Same*, Inv. No. 337-TA-432, Order No. 13, at 11, (January 24, 2001) ("Certain Semiconductor Chips").

In *Certain Multimedia Display & Navigation Devices & Systems, Components Thereof, & Products Containing Same*, Inv. No. 337-TA-694, Comm'n Op. (Aug. 8, 2011) (*"Multimedia Display"*), the Commission stated that a complainant seeking to rely on licensing activities must satisfy three requirements: (1) the investment must be "an investment in the exploitation of the asserted patent;" (2) the investment must relate to licensing; and (3) the investment "must be domestic, *i.e.*, it must occur in the United States." *Id.* at 7-8. The Commission stated that "[o]nly after determining the extent to which the complainant's investments fall within these statutory parameters can we evaluate whether complainant's qualifying investments are 'substantial,' as required by the statute." *Id.* at 8.

Under the first of the three requirements, the complainant must show a nexus between the licensing activity and the asserted patent. *Id.* at 9. When the asserted patent is part of a patent portfolio, and the licensing activities relate to the portfolio as a whole, the Commission requires that the facts be examined to determine the strength of the nexus between the asserted patent and the licensing activities. *Id.* The Commission provided a non-exhaustive list of factors to

consider, such as (1) whether the licensee's efforts relate to "an article protected by" the asserted patent under Section 337 (a)(2)-(3); (2) the number of patents in the portfolio; (3) the relative value contributed by the asserted patent to the portfolio; (4) the prominence of the asserted patent in licensing discussions, negotiations, and any resulting licensing agreement; and (5) the scope of technology covered by the portfolio compared to the scope of the asserted patent. *Id.* at 9-10. The Commission explained that the asserted patent may be shown to be particularly important or valuable within the portfolio where there is evidence that: (1) it was discussed during licensing negotiations; (2) it has been successfully litigated before by the complainant; (3) it is related to a technology industry standard; (4) it is a base patent or pioneering patent; (5) it is infringed or practiced in the United States; or (6) the market recognizes the patent's value in some other way. *Id.* at 10-11.

Once a complainant's investment in licensing the asserted patent in the United States has been assessed in the manner described above, the next inquiry is whether the investment is "substantial." 19 U.S.C. § 1337(a)(3)(C). The Commission takes "a flexible approach whereby a complainant whose showing on one or more of the three section 337(a)(3)(C) requirements is relatively weak may nevertheless establish that its investment is 'substantial' by demonstrating that its activities and/or expenses are of a large magnitude." *Multimedia Display and Navigation Devices*, Comm'n Op. at 15. The Commission has indicated that whether an investment is "substantial" may depend on:

(1) the nature of the industry and the resources of the complainant;

(2) the existence of other types of "exploitation" activities;

(3) the existence of license-related "ancillary" activities;

(4) whether complainant's licensing activities are continuing; and

(5) whether complainant's licensing activities are the type of activities that are referenced favorably in the legislative history of section 337(a)(3)(C).

Id. at 15-16. The complainant's return on its licensing investment (or lack thereof) may also be circumstantial evidence of substantiality. *Id.* at 16. In addition, litigation expenses may be evidence of the complainant's investment, but "should not automatically be considered a 'substantial investment in . . . licensing,' even if the lawsuit happens to culminate in a license." *See John Mezzalingua Associates, Inc. v. U.S. Int'l Trade Comm'n*, --- F.3d ---, 2011 U.S. App. LEXIS 20128 at *13 (Fed. Cir. Oct. 4, 2011).

2. Technical Prong

The technical prong of the domestic industry requirement is satisfied when the complainant in a patent-based section 337 investigation establishes that it is practicing or exploiting the patents at issue. *See* 19 U.S.C. §1337 (a)(2) and (3); *Certain Microsphere Adhesives, Process for Making Same and Prods. Containing Same, Including Self-Stick Repositionable Notes*, Inv. No. 337-TA-366, Comm'n Op. at 8, 1996 WL 1056095 (U.S.I.T.C. Jan. 16, 1996). "In order to satisfy the technical prong of the domestic industry requirement, it is sufficient to show that the domestic industry practices any claim of that patent, not necessarily an asserted claim of that patent." *Certain Ammonium Octamolybdate Isomers*, Inv. No. 337-TA-477, Comm'n Op. at 55 (U.S.I.T.C., Jan. 2004).

The test for claim coverage for the purposes of the technical prong of the domestic industry requirement is the same as that for infringement. *Certain Doxorubicin and Preparations Containing Same*, Inv. No. 337-TA-300, Initial Determination at 109, 1990 WL

710463 (U.S.I.T.C., May 21, 1990), *aff'd*, Views of the Commission at 22 (October 31, 1990); *Alloc, Inc. v. Int'l Trade Comm'n*, 342 F.3d 1361, 1375 (Fed. Cir. 2003). "First, the claims of the patent are construed. Second, the complainant's article or process is examined to determine whether it falls within the scope of the claims." *Certain Doxorubicin and Preparations Containing Same*, Initial Determination at 109. To prevail, the patentee must establish by a preponderance of the evidence that the domestic product practices one or more claims of the patent. The technical prong of the domestic industry can be satisfied either literally or under the doctrine of equivalents. *Certain Dynamic Sequential Gradient Devices and Component Parts Thereof*, Inv. No. 337-TA-335, Initial Determination at 44, Pub. No. 2575 (U.S.I.T.C., November 1992).

V. U.S. Patent No. D558,757

A. Introduction

U.S. Patent No. D588,757 ("the D'757 patent"), titled "Electronic Device," issued on January 1, 2008. (JX-0001 at 2.) The D'757 patent issued from U.S. Patent App. Serial No. 29/270,885, filed on January 5, 2007. (*Id.*) The inventors are Bartley K. Andre, Daniel J. Coster, Daniele De Iuliis, Richard P. Howarth, Jonathan P. Ive, Steve Jobs, Duncan Robert Kerr, Shin Nishibori, Matthew Dean Rohrbach, Douglas B. Satzger, Calvin Q. Seid, Christopher J. Stringer, Eugene Antony Whang, and Rico Zorkendorfer. (*Id.*) The D'757 patent is assigned to Apple, Inc. (*Id.*)

B. Asserted Claims

The D'757 is a design patent and as such has only one claim, which reads as follows:

> We claim the ornamental design for an electronic device, substantially as shown and described.

(*Id.*) The figures from the D'757 patent are reproduced below.

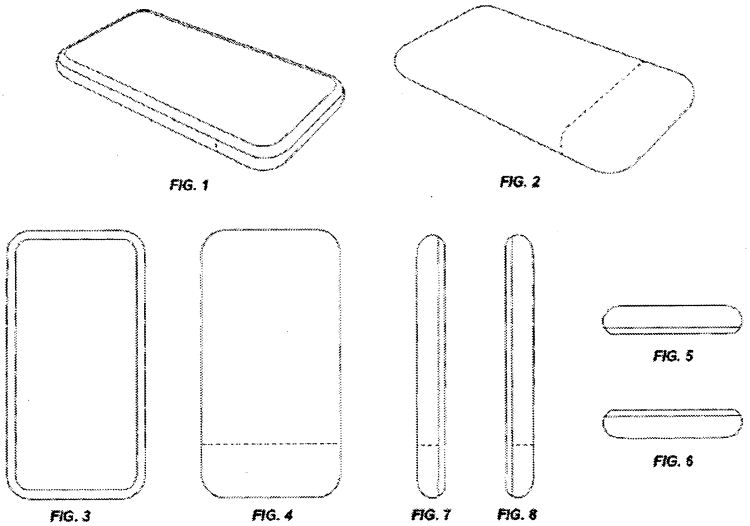

[JX-0001 D'757, Figs. 1-8]

C. Level of Ordinary Skill in the Art

Apple suggests a person of ordinary skill in the relevant art is one holding a Bachelor of Science degree or its equivalent in industrial or product design, and having at least two years of work experience as an industrial designer, including experience in the design of electronic devices. (CIB at 30.) The Staff suggests the designer of ordinary skill in the art pertaining to the D'757 patent is a person who holds a Bachelor of Science degree or its equivalent in industrial or product design and has at least two years of work experience as an industrial designer, including experience in the design of electronic devices. (SIB at 22.) Samsung suggests a person of ordinary skill in the art relevant to Apple's asserted design patents would have experience designing electronic devices including, but not limited to, mobile devices, such as cellular telephone handsets and other electronic devices, or be a designer in academia who conducted research on the interface of products to people or taught industrial design students the design of

electronic devices. (RIB at 64, 103.) Whereas Apple cites to the testimony of its expert in support of its proposed level of ordinary skill, Samsung relies only on attorney argument.

In light of the evidence, I find that a designer of ordinary skill in the art pertaining to the D'757 patent is a person who holds a Bachelor of Science degree or its equivalent in industrial or product design and has at least two years of work experience as an industrial or product designer, including experience in the design of electronic devices.

D. Claim Construction

The infringement analysis for a design patent begins with construing the claimed design. *Arminak & Assocs. v. Saint-Gobain Calmar, Inc.*, 501 F.3d 1314, 1319 (Fed. Cir. 2007).

"A design patent protects the nonfunctional aspects of an ornamental design as shown in the patent." *Elmer v. ICC Fabricating, Inc.*, 67 F.3d 1571, 1577 (Fed. Cir. 1995) (citing *Keystone Retaining Wall Sys., Inc. v. Westrock, Inc.*, 997 F.2d 1444, 1450 (Fed. Cir. 1993)). The design patent claim scope thus "encompasses its visual appearance as a whole, and in particular the visual impression it creates." *Arminak & Assocs.*, 501 F.3d at 1319-20 (internal quotations omitted). Design patents do not cover broad design concepts, however, and are limited by the specific ornamental features depicted in the patent. *See OddzOn Prods., Inc. v. Just Toys, Inc.*, 122 F.3d 1396, 1405 (Fed. Cir. 1997) (finding that proper construction did not encompass broad design concept of "rocket-like tossing ball"); *Contessa Food Prods., Inc. v. Conagra, Inc.*, 282 F.3d 1370, 1377 (finding the district court properly avoided the "broader general design concept" in construing patent).

The Court of Appeals for the Federal Circuit has cautioned trial courts to avoid excessive reliance on a detailed verbal description of the design in construing the claim. *Crocs, Inc. v. ITC*,

598 F.3d 1294, 1302 (Fed. Cir. 2010) (citing *Egyptian Goddess, Inc. v. Swisa, Inc.*, 543 F.3d 665, 679 (Fed. Cir. 2008) (en banc)). "Given the recognized difficulties entailed in trying to describe a design in words, the preferable course ordinarily will be for a district court not to attempt to 'construe' a design patent claim by providing a detailed verbal description of the claimed design." *Egyptian Goddess, Inc.*, 543 F.3d at 679. A court's decision regarding the level of detail to be used in describing the claimed design, though, "is a matter within the court's discretion, and absent a showing of prejudice, the court's decision to issue a relatively detailed claim construction will not be reversible error." *Id.*

Although the Federal Circuit has repeatedly cautioned about the dangers of presenting a full description of the claimed design, the Federal Circuit has nevertheless stated that a court may find it helpful to point out various features of the claimed design in relation to the accused design and the prior art. *See Egyptian Goddess, Inc.*, 543 F.3d at 680 ("In a case such as this one, for example, there would be nothing wrong with the court pointing out to a jury that in the patented design only three sides have buffers attached, while in the accused product (and in the three-sided Nailco patent), all of the sides have buffers attached."). The trial court may also address particular conventions in design patent drafting, such as the role of dashed lines. *Contessa Food Prods., Inc.*, 282 F.3d at 1378 (approving the district court's explanation of the use of dashed lines in the asserted design patent).

Parties' Positions

Apple describes the D'757 design as:

> [A] rectangular body with a flat front surface and evenly curved corners. The flat front surface is encircled by a thin, continuous, and uniform bezel that is flush with the front face and curves to meet the sides of the device. The back of the device is continuous and the edges are curved toward the front face. The design

> has a thin overall profile. One design element—a line across the lower portion of the back—is shown using broken lines and is therefore unclaimed.
>
> From the perspective view of figure 1, it is clear that a flat front surface exists inside of the claimed bezel and is flush with the level of the bezel. This interpretation is corroborated by the front elevation of figure 3, which shows an unshaded front surface that runs all the way to, and meets with, the bezel, and by the profile elevations of Figures 5-8, which show that the front surface is flat.

(CIB at 35-36.) Apple further characterizes the overall impression of the design as an electronic device with "smooth, continuous surfaces and rounded corners [with] a strong statement of continuity and harmony by encircling the oily pond with a uniform, thin, metallic bezel [that is] delicate and unbroken by any buttons, ports, or screws." (CIB at 42.) Apple's expert, Mr. Stringer, summarized the overall appearance of the design as "an aesthetic impression of simplicity, calm, and quiet." (*Id.*)

The Staff believes that Apple's constructions should be adopted. (SIB at 18-19.)

Samsung presents a somewhat narrower interpretation of the D'757 patent. Samsung advocates construing the D'757 design as an electronic device with an opaque, non-reflective front surface, a front surface devoid of any ornamentation or detail except the bezel, a flat rear surface that is smooth and devoid of any detail, except for an optional parting line in the lower portion, no physical buttons or ports on the side or top edges, a bezel that wraps around the front of the entire device, having a uniform thickness at all points, and showing the precise width and shape from the front, sides and top, a side profile that has continuous and perfectly even curves from back to front, in the precise shape and proportions shown, creating a generally oblong shape and a front face that is co-planar with the bezel. (RIB at 27-30.) Samsung contends that Apple conceded that the D'757 does not claim a transparent or reflective front surface because its drawings lack oblique line shading. (*Id.* at 28.)

Samsung argues that Apple's broad construction would apply to the prior art as well, including JP D1250487 (RX-2750), D'889 (RX-0485), and KR-30-0304213 (RX-0371) and thus such a construction is inappropriate. (RIB at 26, 32-38.) Samsung also contends that factors such as the cost of the D'757 Accused Products warrants a greater attention to detail. (*Id.* at 31.) Samsung additionally contends that the design depicted in the D'757 patent is not the proper subject for design patent protection due to its lack of ornamentation. (*Id.* at 29-30.)

Analysis

Samsung contends that Apple's construction is so broad it would apply to the prior art as well and thus such a generic construction is inappropriate. (RIB at 26 and 33-38.) Samsung failed to argue that the scope of the D'757 patent was narrowed by the prior art in its prehearing brief, and thus this argument is deemed waived. (Ground Rule 9.2.) Even if not waived, however, this argument still fails because there is no legal support for considering the prior art for purposes of limiting and defining the scope of the claims. The Federal Circuit described the prior art only as "a frame of reference" for the ordinary observer test, not as a claim construction tool:

> [I]t can be difficult to answer the question whether one thing is like another without being given a frame of reference. The context in which the claimed and accused designs are compared, *i.e.*, the background prior art, provides such a frame of reference and is therefore often useful in the process of comparison.

Egyptian Goddess, 543 F.3d at 677. In using the prior art as a frame of reference for the comparison step of the infringement analysis, the Court compared the accused nail buffer design to the patented nail buffer design and considered whether an ordinary observer would find the accused design to be closer to the patented design than to the prior art. *Id.* at 682. Nothing in

Egyptian Goddess, or any other case I could find supports using, the prior art to "limit the scope" of an asserted design patent for claim construction purposes as Samsung suggests.[1]

I have decided not to provide a verbal construction of the claim. I find that the drawings of the D'757 patent speak for themselves and thus construe the claims of the D'757 to cover the design for an electronic device as depicted in FIGS. 1-8 of the D'757 patent. I also find that the patent does not claim a reflective or shiny front face as the drawings depicting the front surface lack oblique line shading. MPEP § 1503.02(II) ("Oblique line shading must be used to show transparent, translucent and highly polished or reflective surfaces."). Additionally, I find, and Apple and Samsung appear to agree, that the patent covers a front face with a single plane, as the drawings depicting the front surface lack dimensional shading, particularly where the front bezel meets the front face. (*Id.*)

---

[1] Samsung also contends that the design depicted in the D'757 patent is not the proper subject for design patent protection due to its lack of ornamentation. (RIB at 29-30.) Samsung alleges the D'757 patent expressly claims "the ornamental design for an electronic device, substantially as shown and described" and that "the article of manufacture to which the ornamental design has been applied is an electronic device." (JX-0001 at 1). Further, Samsung argues the current Patent Act states that a design patent issues only for a "new, original, and ornamental design for an article of manufacture." 35 U.S.C. § 171 (emphasis added). Samsung contends that the statute does not offer protection for the configuration or shape of an article of manufacture absent the ornamental features. In interpreting what "ornamental design" includes, however, the Federal Circuit's predecessor court made clear that "Section 171 refers, not to the design of an article, but to a design for an article, and is inclusive of ornamental designs of all kinds including surface ornamentation as well as configuration of goods." *In re Zahn*, 617 F.2d 261, 268 (C.C.P.A. 1980) (emphasis added). The MPEP is in accord: "Since a design is manifested in appearance, the subject matter of a design patent application may relate to the configuration or shape of an article, to the surface ornamentation applied to an article, or to the combination of configuration and surface ornamentation." MPEP § 1502. Accordingly, I do not find Samsung's argument persuasive. I have addressed this issue in the claim construction section because this is the section in which Samsung raises the argument.

E. Infringement

After the claims have been construed, the court must consider if the patented design is infringed by the accused product. *Arminak & Assocs.*, 501 F.3d at 1320. Design patent infringement is a question of fact, which a patentee must prove by a preponderance of the evidence. *L.A. Gear, Inc. v. Thom McAn Shoe Co.*, 988 F.2d 1117, 1124 (Fed. Cir. 1993). The sole test for determining infringement of a design patent is the "ordinary observer" test. *See e.g.*, *Egyptian Goddess, Inc.,* 543 F.3d at 678. In defining the "ordinary observer test," the Supreme Court stated:

> [I]f, in the eye of an ordinary observer, giving such attention as a purchaser usually gives, two designs are substantially the same, if the resemblance is such as to deceive such an observer, inducing him to purchase one supposing it to be the other, the first one patented is infringed by the other.

Gorham Mfg. Co. v. White, 81 U.S. 511, 20 L. Ed. 731, 732 (1871). Thus, the "ultimate question [of whether a design patent is infringed] requires determining whether 'the effect of the whole design [is] substantially the same'." *L.A. Gear, Inc.*, 988 F.2d at 1125 (quoting *Gorham*, 81 U.S. at 530). The test is not a comparison of one product to another, but instead is a comparison of the patented *design* to the allegedly infringing *design*. *See Gorham Mfg. Co. v. White,* 81 U.S. at 529 ("The Gorham *design*, and the two *designs* sold by the defendant, which were patented to White, one in 1867, and the other in 1868, are alike the result of peculiarities of outline, or configuration, and of ornamentation. These make up whatever is distinctive in appearance, and of these, the outline or configuration is most impressive to the eye. Comparing the figure or outline of the plaintiffs' *design* with that of the White *design* of 1867, it is apparent there is no substantial difference." (*emphasis added*)).

In assessing infringement, the patented and accused designs do not have to be identical in order for design patent infringement to be found. *Braun Inc. v. Dynamics Corp. of Am.*, 975 F.2d 815, 820 (Fed. Cir. 1992). What is controlling is the appearance of the patented design as a whole in comparison to the accused design. *OddzOn Prods., Inc.*, 122 F.3d at 1405. To assist in determining whether the two designs would be considered "substantially the same" by an ordinary observer, a comparison of the claimed and accused designs with the prior art may be beneficial. *See Egyptian Goddess, Inc.*, 543 F.3d at 677.

Samsung argues vociferously that to prove infringement of a design patent, the patent owner must show "deceptive similarity." (RIB at 20.) In the context of this investigation, Samsung argues that "Apple introduced no evidence that the hypothetical ordinary observer, paying as much attention as a normal smartphone purchaser would pay and considering all claimed views of the asserted designs, '*would* be deceived' into thinking that any of the accused Samsung phones are the same as either asserted design patent." (*Id.* (emphasis in original).) To support this argument Samsung relies on the following oft cited and paraphrased quote from *Gorham*:

> [I]f, in the eye of an ordinary observer, giving such attention as a purchaser usually gives, two designs are substantially the same, if the resemblance is such as to deceive such an observer, inducing him to purchase one supposing it to be the other, the first one patented is infringed by the other.

Gorham Co. v. White, 81 U.S. 511, 528 (1872). Samsung argues, citing to a number of cases, that the Federal Circuit continues to rely on a showing of deceptive similarity. See e.g., *Egyptian Goddess*, 543 F.3d at 681 (The question in a design patent case "is whether an ordinary observer, familiar with the prior art … designs, would be deceived into believing the [accused product] is the same as the patented design."); *Crocs, Inc. v. International Trade Comm'n*, 598 F.3d 1294,

1303 (Fed. Cir. 2010.) ("To show infringement under the proper test, an ordinary observer, familiar with the prior art designs, would be deceived into believing that the accused product is the same as the patented design."); *Door-Master Corp. v. Yorktowne, Inc.*, 256 F.3d 1308, 1313 (Fed. Cir. 2001) ("Two designs are substantially the same if their resemblance is deceptive to the extent it would induce an ordinary observer, giving such attention as a purchaser usually gives, to purchase an article having one design supposing it to be the other.").

While it is true that the quotes cited by Samsung in isolation may appear to suggest that the test for design patent infringement requires an affirmative showing that an ordinary observer would be deceived into thinking the accused design is the patented design, I believe such a conclusion would be error and that Samsung misunderstands both the Supreme Court's and Federal Circuit's teachings. Contrary to Samsung's argument, I do not find deceptive similarity to be a prerequisite to a finding of infringement, but merely a consequence, or result, of the designs being substantially the same.

Starting with *Gorham*, I note the Court there began its analysis by stating, "The sole question is one of fact. Has there been an infringement? Are the designs used by the defendant substantially the same as that owned by the complainants?" *Gorham*, 81 US at 524. The Court did not ask whether one was, or would have been, deceived by the defendant's designs, only whether the accused designs were substantially the same as the patented design. The Supreme Court went on to state that "[i]f, then, identity of appearance, or (as expressed in *McCrea* v. *Holdsworth*) sameness of effect upon the eye, is the main test of substantial identity of design, the only remaining question upon this part of the case is, whether it is essential that the

appearance should be the same to the eye of an expert."[2] *Id.* at 527. Again, the Court confirms the test for infringement is identity of appearance (*i.e.*, the sameness of the effect upon the eye), not whether one would be deceived by the accused designs. Further, the Court held that "whatever differences there may be between the plaintiffs' design and those of the defendant in details of ornament, they are still the same in general appearance and effect, so much alike that in the market and with purchasers they would pass for the same thing-so much alike that even persons in the trade would be in danger of being deceived." *Id.* at 531. Here the Court's language makes clear that it is the sameness in "general appearance and effect" that leads to the "danger of being deceived."

Next, I turn to the Federal Circuit's opinion in *Egyptian Goddess*. Contrary to the selective quote by Samsung, the Federal Circuit specifically confirmed in Egyptian Goddess that the test for design patent infringement was whether the claimed design and accused design are "substantially the same" to an ordinary observer.

> In some instances, the claimed design and the accused design will be sufficiently distinct that it will be clear without more that the patentee has not met its burden of proving the two designs would appear "substantially the same" to the ordinary observer, as required by *Gorham.*

Egyptian Goddess, 543 F.3d at 678; *see also id.* at 682 ("In light of the similarity of the prior art buffers to the accused buffer, we conclude that no reasonable fact-finder could find that EGI met its burden of showing, by a preponderance of the evidence, that an ordinary observer, taking into account the prior art, would believe the accused design to be the same as the patented design.").

---

[2] I am acutely aware that the test has not involved an expert, but requires "the eye of an ordinary observer giving such attention as a purchaser usually gives" since the time of *Gorham.*

Moreover, the court made clear that the deception results from the substantial similarity between the accused design and patented design, stating that:

> In the language used by the Supreme Court in *Gorham,* 81 U.S. at 528, we hold that the accused design could not reasonably be viewed as so similar to the claimed design that a purchaser familiar with the prior art would be deceived by the similarity between the claimed and accused designs, "inducing him to purchase one supposing it to be the other."

Id. at 683. Other Federal Circuit decisions are in accord. *Croc*s, 598 F.3d at 1303 ("In other words, "the deception that arises is a result of the similarities in the overall design, not of similarities in ornamental features in isolation."); *Richardson v. Stanley Works, Inc.*, 597 F.3d 1288, 1295 (Fed. Cir 2010.)

Accordingly, I do not find that *Gorham*, or any other of the design patent cases I have reviewed, supports the notion that there need be an affirmative showing of deceptive similarity to prove design patent infringement. In accordance with Supreme Court and Federal Circuit precedent, I find that the sole test for design patent infringement is whether the claimed design is "substantially the same" as the accused design in the eye of the ordinary observer, giving such attention as a purchaser usually gives. It is not, as the Supreme Court held in *Gorham*, the eye of the expert. Thus, I do not find Apple's expert Dr. Bressler's failure to consider whether an ordinary observer would be deceived by the accused designs fatal to Apple's infringement contentions.

The Parties' Positions

Apple alleges that certain Samsung products infringe the claimed design of the D'757 patent. (CIB at 46.) Apple argues that the Galaxy S 4G is a representative product for the purposes of its infringement analysis. (*Id.* at 43.) Apple expert Mr. Bressler argues that the

Galaxy S 4G and D'757 patent designs contain the same major visual elements, including: the same rectangular overall shape and proportion, a flat front face, curved corners, a thin continuous bezel that curves toward the front face, and rounded edges that contiguously connect with the bezel from the continuous back surface. (*Id.* at 46.) Apple also contends that with respect to each of the selected pieces of prior art, all of the products accused of infringing the D'757 patent "appear more similar to the D'757 design" than they do to any piece of prior art. (*Id.*) Apple argues that "Their flat faces and overall body shapes provide substantially the same overall visual impression as the design claimed in the D'757 Patent." (*Id.*)

Apple also contends that although there are some differences between the claimed design and the design of the accused products, the differences did not alter the overall impression of the designs. (*Id.* at 47.) Apple also argues that features on the back of the accused products should be given less weight because the ordinary observer's overall impression of the Apple designs is derived primarily from the front surface of the phone, particularly because of the striking nature of this aspect of the Apple design and its departure from the prior art. (*Id.*) According to Apple, although the back surface contributes to the overall impression, it does not have as strong of an influence as the front surface on the overall impression. (*Id.*)

The Staff argues that Apple expert Mr. Bressler applied the correct test in determining that the D'757 patent is infringed by the accused products. (SIB at 26.) The Staff argues that the D'757 Accused Products infringe the D'757 design. (*Id.*)

Samsung contends Apple has not met its burden of showing that an ordinary observer, giving such attention as a purchaser usually gives to the types of products at issue, looking at all

views, and familiar with the prior art, would be deceived into believing the D'757 Accused Products are the same design as that which is disclosed in Apple's D'757 patent. (RIB at 30.)

Samsung first contends the D'757 Accused Products do not infringe the claims of the D'757 patent in view of the prior art. (RIB at 32-38.) Samsung then argues the D'757 Accused Products do not infringe the claim of the D'757 patent in view of the differences between the claimed design and the D'757 accused products which are common to all products. (RIB at 38-42.) Samsung argues that the overall shape of the D'757 Accused Products differs from the patented design. (*Id.* at 40-41.) Samsung contends none of the accused devices have an even, continuous curve in their corners and edges, and they do not have oblong profiles shown in the D'757 patent. (*Id.*)

In addition, Samsung argues that additional features of the D'757 Accused Products not present in the patented design further distinguish the accused designs from the claimed design. (RIB at 38-42.) First, Samsung argues the D'757 Accused Products all have reflective front surfaces with rectangular display screens that do not take up the entirety of the front face. (RIB at 39-40.) Samsung contends Apple's expert testified both that reflectivity and transparency were the dominant characteristic of the D'757 Accused Products and that these features were not claimed by the D'757 patent. (RIB at 39-40.) In addition, Samsung contends that unlike D'757, which Apple admits is "lacking in ornamentation" aside from a bezel around the front surface, the D'757 Accused Devices have openings on the front surfaces for the receiver or earpiece, and soft key buttons near the bottom of the front face with graphical icons to denote touch sensitive areas. (*Id.* at 40.) Samsung also argues that the D'757 Accused Products have circular sensors near the receiver at the top of the front face and physical buttons and ports on the side, top and/or

bottom edges. (*Id.*) Furthermore, Samsung argues the D'757 Accused Products have features on the rear surfaces, including camera windows and other features that D'757 design lacks. (*Id.*) Samsung illustrates these differences as exemplified by the Galaxy S 4G in the figures shown below.[3]

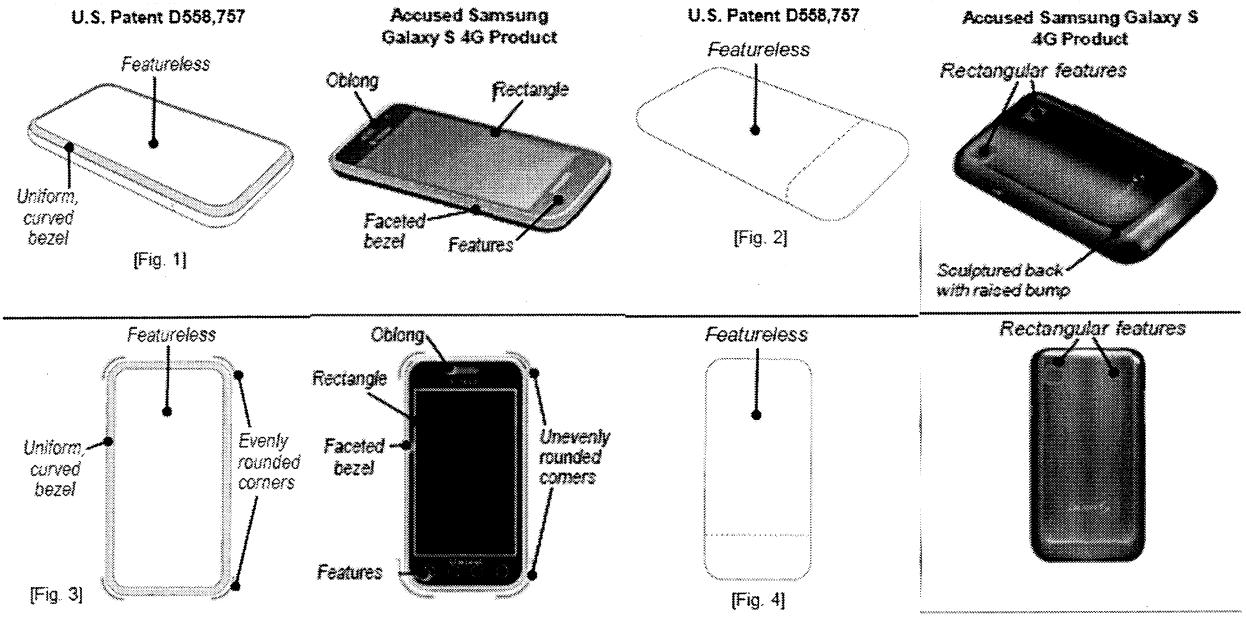

(RDX-37-9).

[3] Even though I am basing this decision upon a comparison of the **physical** products with the patented design, I have included images herein for a frame of reference. In so doing, I note the images of any products (Apple or Samsung) and any prior art or alternative designs compared to the asserted design patents have been resized while maintaining their aspect ratio so that they better correspond with each other. Resizing the images so that they are on the same scale as the patent figures allows for ease of comparison between the products or prior art and Apple's claimed design. *See also Sun Hill Indus., Inc. v. Easter Unlimited, Inc.*, 48 F.3d 1193, 1196-97 (Fed. Cir. 1995) (finding that trial court incorrectly considered size as part of its infringement analysis).

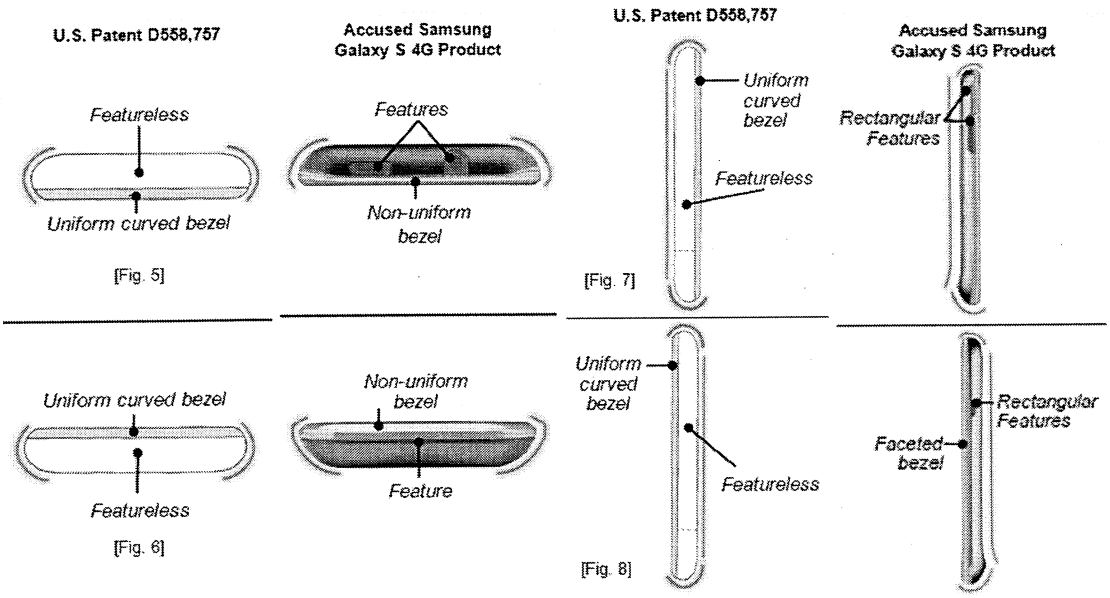

(RX-3631 at 24; RDX-37-11). (RX-3631 at 26; RDX-37-12).

Samsung also contends that factors such as the high cost of the D'757 Accused Products warrants a greater attention to detail. (RIB at 31.)

In addition to the general arguments above, Samsung specifically addresses each of the D'757 Accused Devices.

Galaxy S 4G SGH-T959V and Vibrant SGH-T959

In addition to the common differences already noted and shown above such as the curvature of the corners and side faces, the reflective front surface and the additional features, Samsung contends an ordinary observer when viewing the accused products in their entirety will notice the non-flat back with a sculptured protrusion in the lower portion. (RIB at 42-43.) Unlike the rear of the D'757 patent, which is flat across the entire back and wraps in a continuous, even curve up to the bezel, Samsung argues that both the Galaxy S 4G and the Vibrant have a prominent "bump" on the back that an ordinary observer would both see and feel

when considering the products' overall impressions. (*Id.*) In addition, Samsung argues the bezels also protrude above the surface of the glass, as admitted by Apple's expert. (*Id.*)

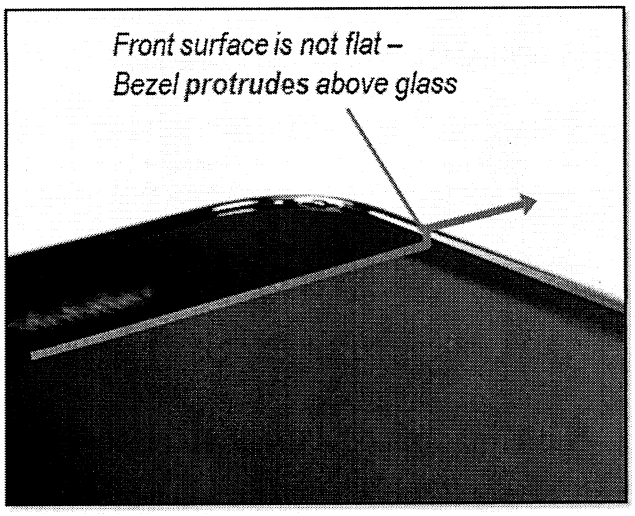

Samsung Galaxy S 4G (RPX-149)

Mesmerize SCH-I500, Fascinate SCH-I500 and Showcase SCH-I500

In addition to the differences common to all accused Samsung products as compared with the D'757 patent, Samsung states that the Mesmerize, Showcase and Fascinate have a "bezel," shown below, that is divided into front and rear parts, sometimes called a "double ring bezel," that does not have a curve or sloping shape, unlike the D'757 patent's single portion bezel. (RIB at 43-44.)

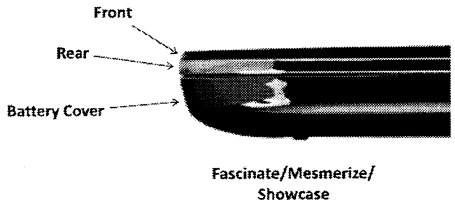

(RX-3444C at 29 (RDX-2-1)).

Samsung contends that the Mesmerize, Showcase and Fascinate also have a different shape in the profile view, appearing to have almost perpendicular edges that taper in slightly

toward the rear surface, with different curvature of the sides of the device than the D'757 patent. (RIB at 43-44). In addition to distinguishing the overall visual impression of these phones from the D'757, Samsung argues these changes in shape produce a different tactile impression in the hand that the ordinary observer would readily notice. (*Id.* at 44.)

Transform SPH-M920

In addition to the differences common to all accused Samsung products as compared with the D'757 patent, Samsung argues the Transform is a slider phone. Samsung argues it has a bezel that is much thicker in proportion to the device than the D'757 patent's bezel to accommodate the additional hardware required for the sliding keyboard. Samsung argues the Transform also has a contrasting band underneath the bezel—between it and the battery cover—which could be seen as a "double ring bezel." (RIB at 44-45.) Samsung also notes the Transform has a different shape in the profile view with a much flatter curve on the sides of the device than the D'757 patent, and it has a sculptured or non-planar back, with a feature protruding from the lower portion of the back, unlike the rear of the D'757 patent. (*Id.*) Samsung contends that because each element of the designs is visibly different, the overall impression of the Transform is sufficiently different from the D'757 not to be deceiving. (*Id.*)

Galaxy Player 5.0 YP-G70/NAW

In addition to the differences common to all accused Samsung products as compared with the D'757 patent, Samsung argues the Galaxy Player 5.0, shown below, has a bezel that is thinner in proportion to the device and a different shape than the bezel of the D'757 patent. (RIB at 46-47). Samsung then argues the side profile does not have a continuous curve, but appears to have almost perpendicular side edges that taper in toward the rear surface. (*Id.*) Samsung also

argues that the Galaxy Player 5.0 has a back with sharper edges at the top and bottom portions than the D'757 patent. (*Id.*) Additionally, Samsung argues that the top edge of the Galaxy Player 5.0 is substantially flat, unlike D'757. (*Id.*) Samsung argues that because each element of the designs is visibly different, the overall impression of the Galaxy Player 5.0 is sufficiently different from the D'757 not to be deceiving. (*Id.*)

Galaxy Player 4.0 YP-G1CWY

In addition to the differences common to all accused Samsung products as compared with the D'757 patent, Samsung contends that the Galaxy Player 4.0, shown below, like the Vibrant and Galaxy S 4G, has a bezel that does not have a continuous curve like the D'757 patent. (RIB at 45-46). Rather, Samsung argues that the bezel angles outward from the front surface and then drops down, which gives the bezel a more angular profile when viewed from the top, bottom and sides. (*Id.*) Samsung further argues that the Galaxy Player 4.0 has a sculpted, non-planar back portion along the upper edge of the rear surface to accommodate the headphone jack, unlike the smooth rear of the D'757 patent. (*Id.*) Additionally, Samsung argues that the top edge of the Galaxy Player 4.0 is substantially flat, unlike D'757. (*Id.*) Samsung argues that because each element of the designs is visibly different, the overall impression of the Galaxy Player 4.0 is sufficiently different from the D'757 not to be deceiving. (*Id.*)

Analysis

Samsung contends that factors such as the high cost of the D'757 Accused Products warrants a greater attention to detail. (RIB at 31.) Apple's own expert admitted, purchasers of smartphones study and compare phone models even before going to the store to purchase them, as those phones often require entering into multi-year contracts. (Bressler Tr. 709:21-25.) The

fact that the accused product is relatively expensive and not an "impulse purchase" is indicative of the level of attention an ordinary observer would give. *See Child Craft Industries, Inc. v. Simmons Juvenile Products Co., Inc.,* 990 F. Supp. 638, 643-44 (S.D. Ind. 1998). Courts have recognized that consumers purchasing electronics for hundreds of dollars are sophisticated, take care in making their purchases, and have knowledge of the range of products under consideration. *See Edge Wireless LLC v. U.S. Cellular Corp.,* 312 F. Supp. 2d 1325, 1333 (D. Or. 2003); *M & G Elecs. Sales Corp. v. Sony Kabushiki Kaisha,* 250 F. Supp. 2d 91, 104 (E.D.N.Y. 2003). Accordingly, I have kept it in mind that a purchaser of the kind of devices at issue in this investigation will pay significant attention to what they are buying.

Apple argues that features on the back of the accused products should be given less weight because the ordinary observer's overall impression of the Apple designs is derived primarily from the front surface of the phone, particularly because of the striking nature of this aspect of the Apple design and its departure from the prior art. (CIB at 47.) I find Apple's argument that features on the back of the accused products should be given less weight unpersuasive. The D'757 patent covers both front, back and side views of the design, and as such, I find that an ordinary observer will necessarily take all these views of the accused product into account when determining if the designs are substantially similar. *Arminak & Assocs.*, 501 F.3d at 1324.

Consistent with Apple's broad construction of the patented design, Apple argues that the Galaxy S 4G is representative of the D'757 Accused Products. Likewise, consistent with Samsung's more narrow construction, Samsung divides the D'757 Accused Products into five

groupings. I will analyze infringement according to the groupings set forth by Samsung as I find these groupings better reflect the differences between the accused products.

1. Galaxy S 4G SGH-T959V and Vibrant SGH-T959

When comparing the claimed design to the **physical** exhibits of the Galaxy S 4G (CPX-0056) and the Vibrant (CPX-0141), I find that in light of the prior art the overall impression of the design claimed in the D'757 patent is substantially different than the Galaxy S 4G and the Vibrant. The D'757 patent evinces a simplistic and minimalistic design described by Apple in their post hearing brief as:

> smooth, continuous surfaces and rounded corners [with] a strong statement of continuity and harmony by encircling the oily pond with a uniform, thin, metallic bezel. The bezel is delicate and unbroken by any buttons, ports, or screws . . . These elements reflect the design principles of the iPhone, summarized by Mr. Stringer as an aesthetic impression of simplicity, calm, and quiet.

(CIB at 42.) The number and prominence of the features on the Galaxy S 4G and Vibrant, however, produce a more angular and a distinctly busier impression than the D'757 design. In each of the views of the D'757 patent and the Galaxy S 4G, I note a number of differences that contribute to the dissimilarity between the overall impression of the D'757 patent and the overall impression of the Galaxy S 4G and Vibrant. These differences are exemplified by figures RDX-37-9, RDX-37-10, RDX-37-11, and RDX-37-12. Although the following discussion addresses specific differences between the D'757 design and the Galaxy S 4G and Vibrant, I have only considered these details is in the context of the overall impression created by the Galaxy S 4G and Vibrant. The drawings below of the claimed design, prior art, and accused products are included to help elucidate my infringement analysis. The drawings are for illustrative purposes only as the test for design patent infringement requires a comparison of the claimed design with

the actual accused product (which I have done numerous times for all of the accused products), not the claimed design with a drawing of the accused design. The annotations to the drawings were included by Samsung and I accord them no weight.

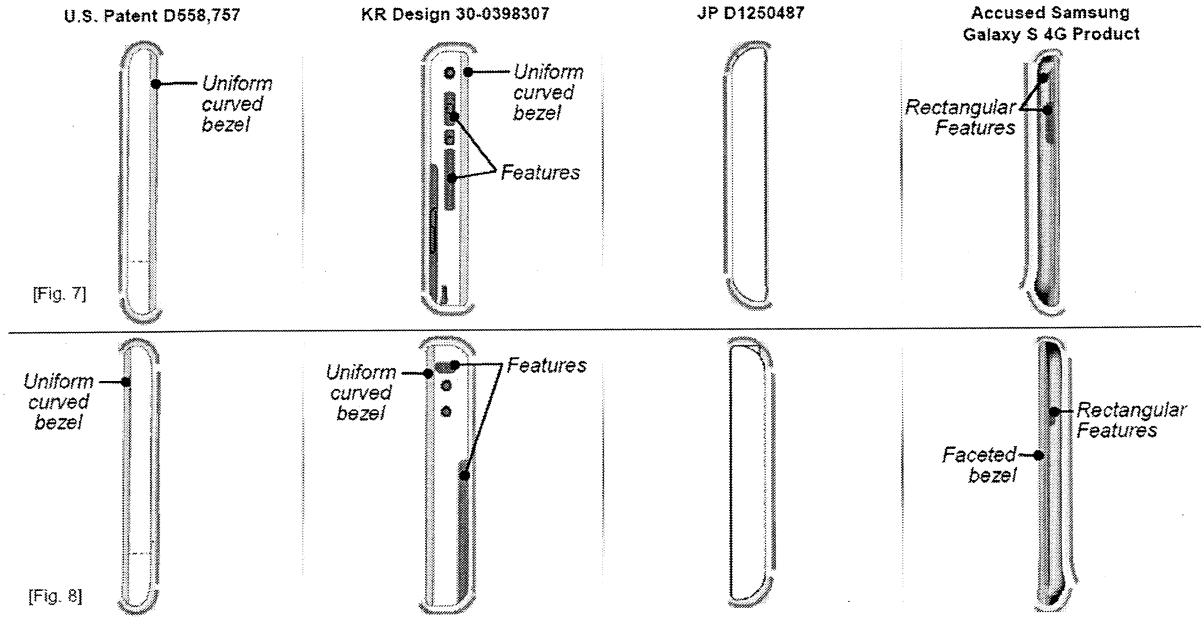

(RDX-37-12)

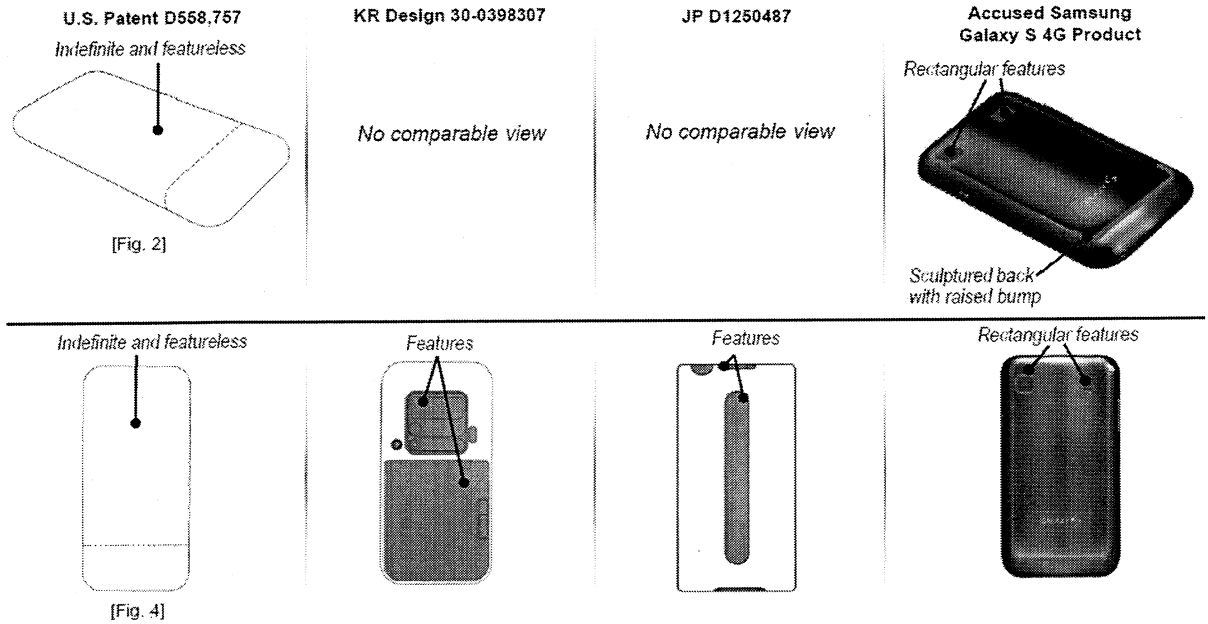

(RDX-37-10)

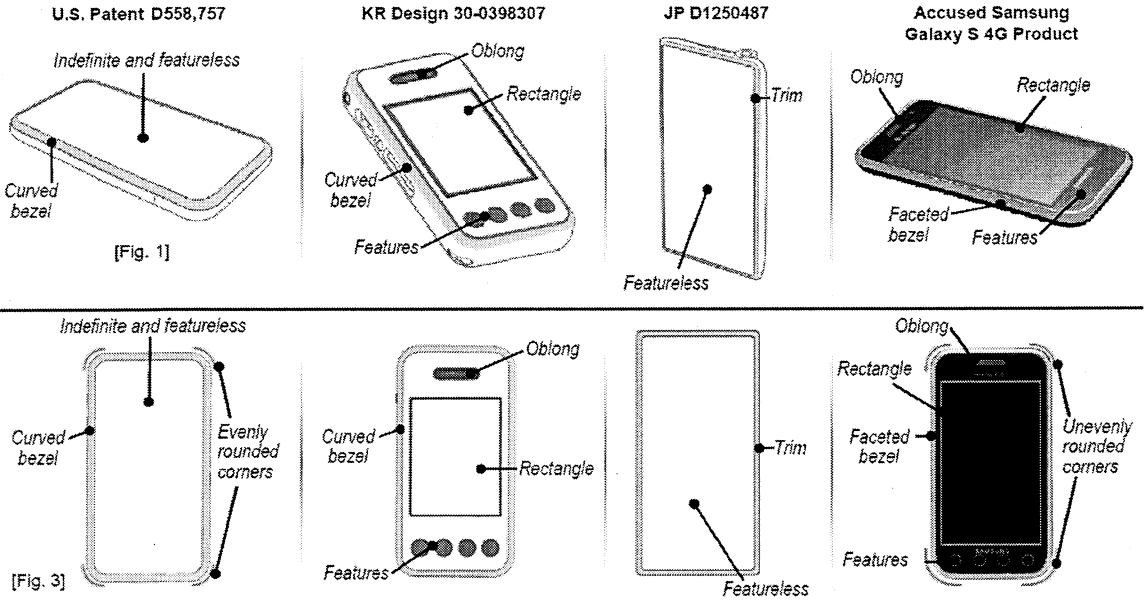

(RDX-37-9)

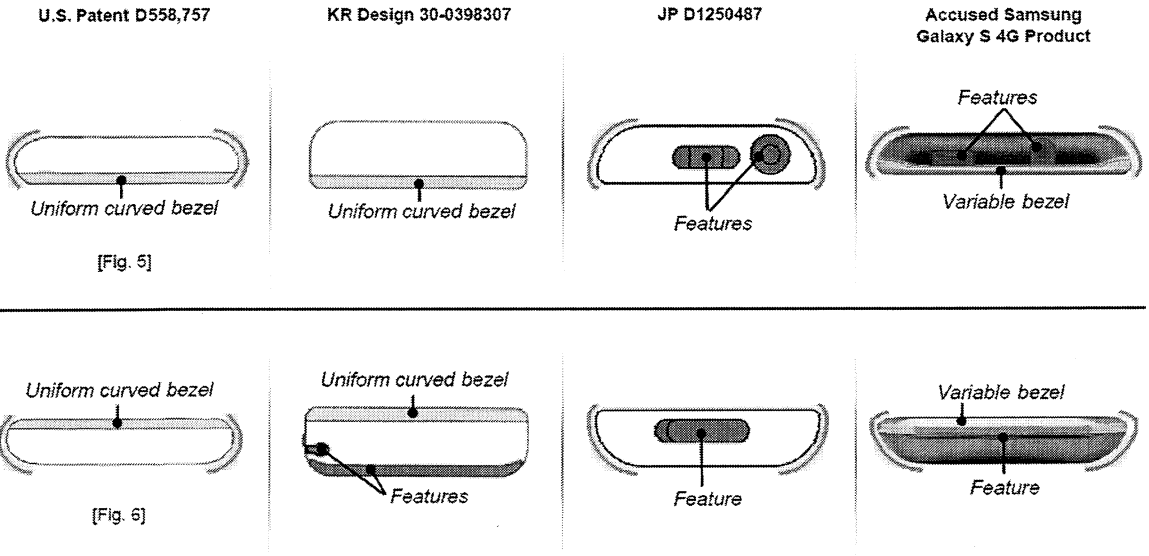

(RDX-37-11)

In light of the prior art, the side views demonstrate the difference between the D'757 patent's impression of sleek minimalism and the Galaxy S 4G's busier appearance. For example,

the side views of the D'757 patent show a flat back surface, rounded edges, a curved bezel which meets and joins with the rounded edges, and a distinct lack of detail or ornamentation—creating an uninterrupted and sleek impression. (*See* JX-0001.) In contrast, the Galaxy S 4G has a non-flat back, somewhat more angular edges, an angular bezel which does not meet and join with the rounded edges, and a number of rectangular features. (*Compare* JX-0001 *with* CPX-0144; *see also* RDX-37-12.) The rectangular features are noticeable because they protrude slightly, however the overall effect is that they tend blend in with the rest of the side because of their similar coloring. (*See* CPX-0144.)

In light of the prior art, the rear and rear perspective views also demonstrate the difference between the D'757 patent's impression of sleek minimalism and the Galaxy S 4G's busier impression. For example, the rear and rear perspective views of the D'757 patent show a flat back surface, rounded edges, and a distinct lack of detail or ornamentation—again creating an uninterrupted and sleek impression of simplicity. (*See* JX-0001.) In contrast, the Galaxy S 4G has a sculptured back and rectangular features which draw the observer's eye because of their contrasting color and prominence. (*Compare* JX-0001 *with* CPX-0144; *see also* RDX-37-10.)

In light of the prior art, the front and front perspective views also demonstrate the difference between the D'757 patent's impression of sleek minimalism and the Galaxy S 4G's impression of detail. For example, the front and front perspective views of the D'757 patent show a flat front surface that is co-planar with the bezel, rounded edges, and a distinct lack of detail or ornamentation—creating an uninterrupted and sleek impression of simplicity. (*See* JX-0001.) In contrast, the Galaxy S 4G has a reflective front surface with rectangular features and a

non-coplanar bezel.[4] (*Compare* JX-0001 *with* CPX-0144; *see also* RDX-37-9.) As with the side views, however, these rectangular features tend to disappear into the background of the front face. (*See* CPX-0144.)

In light of the prior art, the bottom and top views further exemplify the difference between the D'757 patent's impression of sleek minimalism and the Galaxy S 4G's busier impression. For example, the top and bottom views of the D'757 patent show rounded edges, a curved bezel which meets and joins with the rounded edges, and a distinct lack of detail or ornamentation—creating an uninterrupted and sleek impression. (*See* JX-0001.) In contrast, the Galaxy S 4G has somewhat more angular edges, an angular bezel which does not meet and join with the rounded edges, and a number of rectangular features which draw the observer's eye. (*Compare* JX-0001 *with* CPX-144; *see also* RDX-37-11.)

Accordingly, I find that an ordinary observer familiar with the prior art, giving such attention as a purchaser usually gives to the types of products at issue, considering the overall appearance and impression of the claimed design and the accused design, would find the Galaxy

---

[4] The bezels of the Galaxy S 4G and the Vibrant protrude above the surface of the glass, as admitted by Apple's expert. I do not find this to be a prominent visual feature of the accused products. I have also found no case law in support of Samsung's argument that the tactile impression of the accused product is something an ordinary observer would take into account when considering if the design and the accused products are substantially similar. Nevertheless if an ordinary observer would consider this difference, it would only strengthen my conclusion that an ordinary observer would consider the claimed design of the D'757 patent and the Galaxy S 4G and Vibrant products to have impressions that are not substantially the same.

S 4G and Vibrant are not substantially the same design as Apple's D'757 patent and thus do not infringe the D'757 patent.

2. Mesmerize SCH-I500, Fascinate SCH-I500 and Showcase SCH-I500

When comparing the claimed design to the **physical** exhibits of the Mesmerize (CPX-0090), Showcase (CPX-0124) and Fascinate (CPX-0044), I find that in light of the prior art the overall impression of the D'757 patent is substantially different than the Mesmerize, Fascinate and Showcase accused products. The Fascinate is representative of this group. The D'757 evinces a simplistic and minimalistic design described by Apple in their post hearing brief as

> smooth, continuous surfaces and rounded corners [with] a strong statement of continuity and harmony by encircling the oily pond with a uniform, thin, metallic bezel. The bezel is delicate and unbroken by any buttons, ports, or screws . . . These elements reflect the design principles of the iPhone, summarized by Mr. Stringer as an aesthetic impression of simplicity, calm, and quiet.

(CIB at 42.) The number and prominence of the features on the Fascinate, however, produces a more angular, much busier impression than the D'757 patent. In each of the views of the D'757 patent and the Fascinate, I note a number of differences that contribute to the dissimilarity between the overall impression of the D'757 patent and the overall impression of the Fascinate. These differences are exemplified by figures RDX-37-13, RDX-37-14, RDX-37-15, and RDX-37-16. Although the following discussion addresses specific differences between the D'757 design and the Fascinate, I note that I considered these details is in the context of the overall impression created by the Fascinate.

The drawings below of the claimed design, prior art, and accused products are included to help explain (or provide context for) my infringement analysis. The drawings are for illustrative purposes only as the test for design patent infringement requires a comparison of the claimed

design with the actual accused product (which I have done numerous times for all of the accused products), not the claimed design with a drawing of the accused design. The annotations to the drawings were included by Samsung and I accord them no weight.

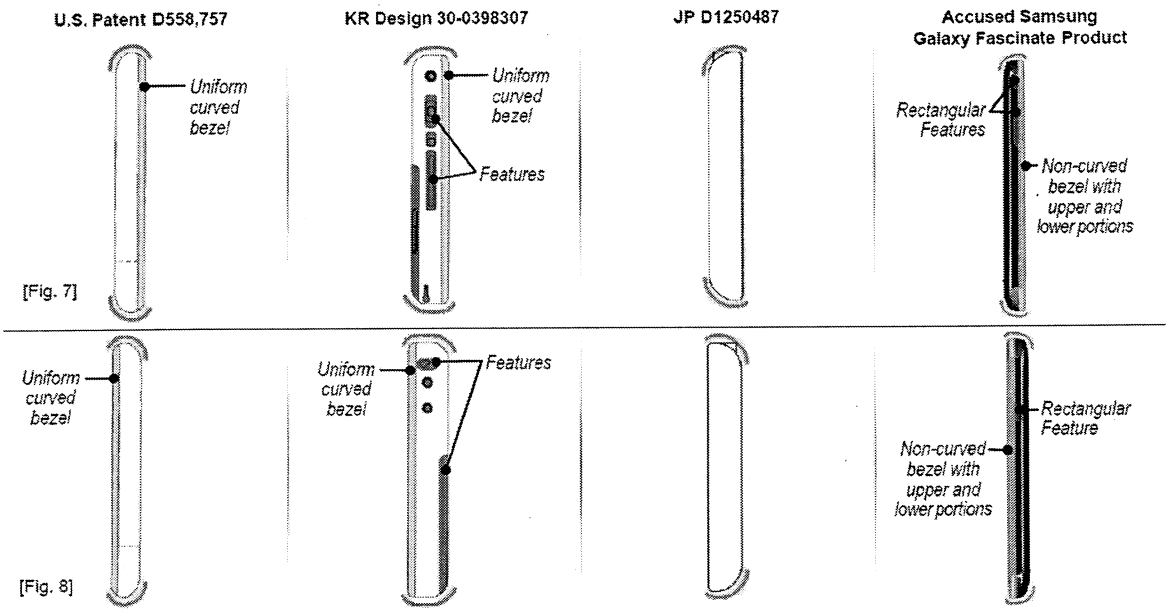

(RDX-37-16)

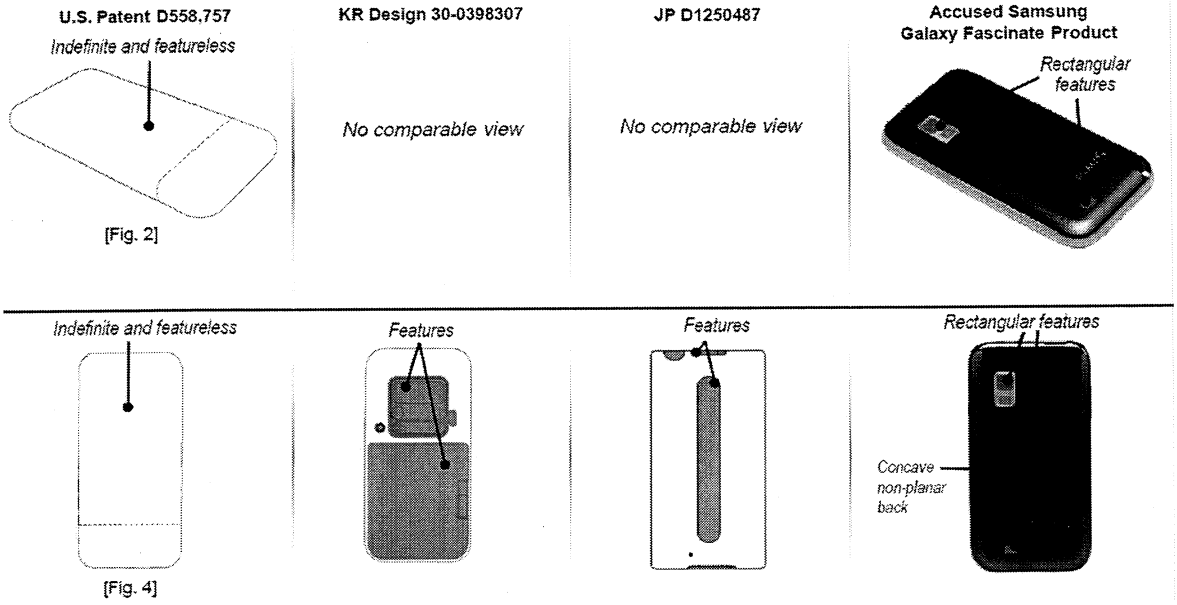

(RDX-37-14)

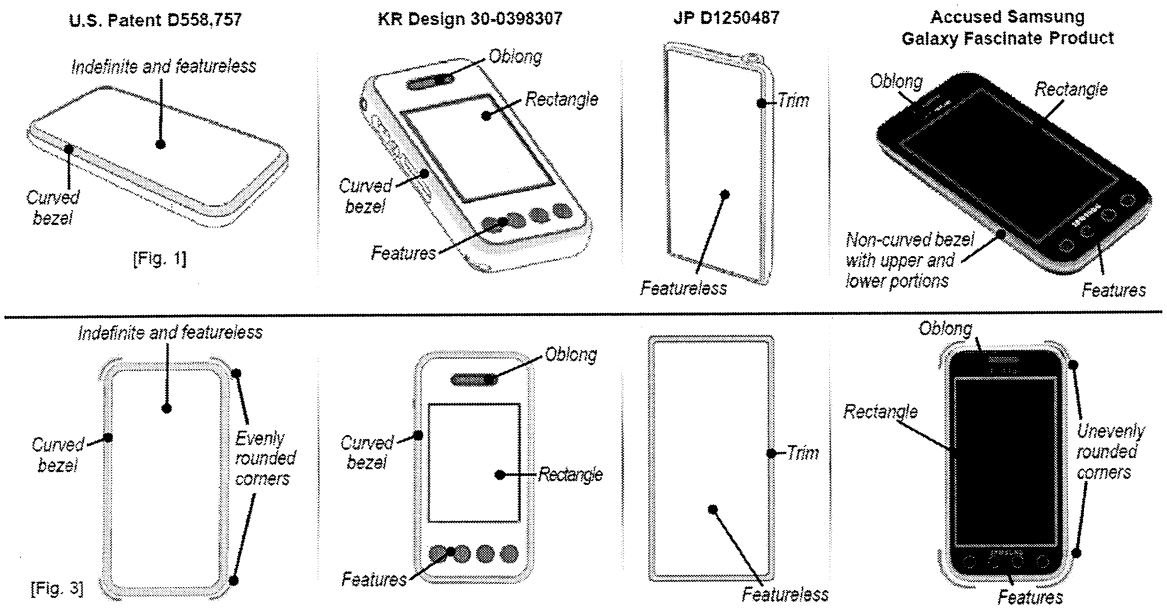

(RDX-37-13)

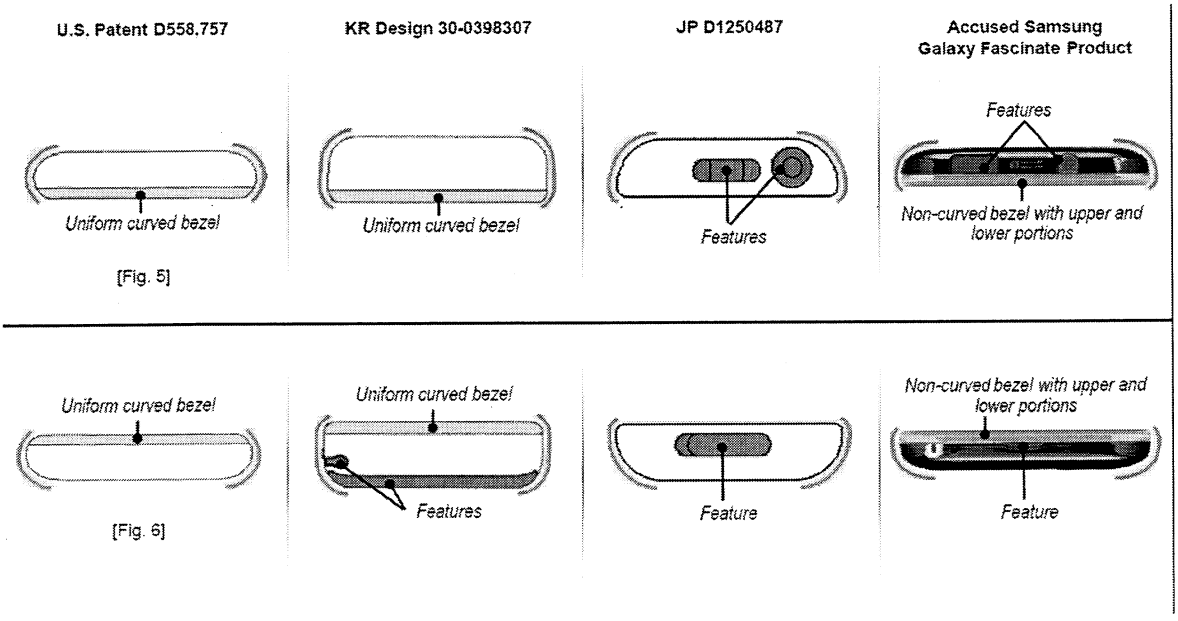

(RDX-37-15)

For example, the side views demonstrate the difference between the D'757 patent's impression of sleek minimalism and the Fascinate's busier appearance. (*See* RDX-37-16.) In addition to the differences common to all accused Samsung products as compared with the D'757 patent, the Fascinate, shown below, has a "bezel" that is divided into front and rear parts, sometimes called a "double ring bezel." (CPX-0044; CPX-0090; CPX-0124; RDX-2-1). The double ring bezel of the Fascinate does not have a curve or sloping shape, unlike the D'757 patent's single bezel. (*Id.*)

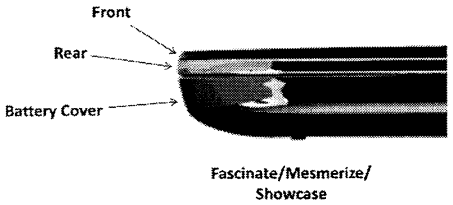

(RX-3444C at 29 (RDX-2-1)).

The Fascinate also has a different shape in the side view, appearing to have almost perpendicular edges that taper in slightly toward the rear surface, with different curvature of the sides of the device than the D'757 patent. (*Compare* JX-0001 *with* CPX-0044, CPX-0090, CPX-0124; *see also* RDX-2-1). On the other hand, the side views of the D'757 patent show rounded edges, a curved bezel which meets and joins with the rounded edges, and a distinct lack of detail or ornamentation—creating an uninterrupted and sleek impression. (JX-0001.) The Fascinate also has rectangular features seen in the side view that are noticeable because they protrude slightly; however, these features tend to blend in with the rest of the side because of their similar coloring.

In light of the prior art, the rear and rear perspective views also demonstrate the difference between the D'757 patent's impression of sleek minimalism and the Fascinate's busier

impression. For example, the rear and rear perspective views of the D'757 patent show a flat back surface, rounded edges, and a distinct lack of detail or ornamentation—again creating an uninterrupted and sleek impression of simplicity. (JX-0001.) In contrast, the Fascinate has rectangular features which draw the observer's eye because of their contrasting coloring and prominence. (*Compare* JX-0001 *with* CPX-0044, CPX-0090, and CPX-0124; *see also* RDX-37-14.)

In light of the prior art, the front and front perspective views also demonstrate the difference between the D'757 patent's impression of sleek minimalism and the Fascinate's busier impression. For example, the front and front perspective views of the D'757 patent show a flat front surface which is co-planar with the bezel, rounded edges, and a distinct lack of detail or ornamentation—creating an uninterrupted and sleek impression of simplicity. (JX-0001.) In contrast, the Fascinate has a reflective front surface with more rectangular features and a non-coplanar bezel.[5] (*Compare* JX-0001 *with* CPX-0044; *see also* RDX-37-13.) As with the side views, however, these rectangular features tend to disappear into the background of the front face. (*See* CPX-0044.)

---

[5] The bezels of the Fascinate, Showcase and Mesmerize protrude above the surface of the glass, as admitted by Apple's expert. I do not find this to be a prominent visual feature of the accused products. I also have found no case law in support of Samsung's argument that the tactile impression of the accused product is something an ordinary observer would take into account when considering if the design and the accused products are substantially similar. Nevertheless if an ordinary observer would consider this difference, it would only strengthen my conclusion that an ordinary observer would consider the claimed design of the D'757 patent and the Fascinate, Showcase and Mesmerize products to have impressions that are not substantially the same.

In light of the prior art, the bottom and top views also demonstrate the difference between the D'757 patent's impression of sleek minimalism and the Fascinate's impression of detail. For example, the top and bottom views of the D'757 patent show rounded edges, a curved bezel which meets and joins with the rounded edges, and a distinct lack of detail or ornamentation—creating an uninterrupted and sleek impression. (JX-0001.) In contrast, the Fascinate has somewhat more angular edges, an angular bezel which does not meet and join with the rounded edges, and a number of rectangular features which draw the observer's eye. (*Compare* JX-0001 *with* CPX-0044; *see also* RDX-37-15.)

Accordingly, I find that an ordinary observer familiar with the prior art, giving such attention as a purchaser usually gives to the types of products at issue, considering the overall appearance and impression of the claimed design and the accused design, would find the Mesmerize, Showcase and Fascinate are not substantially the same design as claimed in Apple's D'757 patent and thus do not infringe the D'757 patent.

3. Galaxy Player 4.0 YP-G1CWY

When comparing the claimed design to the **physical** exhibit of the Galaxy Player 4.0 (CPX-0054), I find that in light of the prior art the overall impression of the D'757 patent is substantially different than the Galaxy Player 4.0. The D'757 evinces a simplistic and minimalistic design described by Apple in their post hearing brief as

> smooth, continuous surfaces and rounded corners [with] a strong statement of continuity and harmony by encircling the oily pond with a uniform, thin, metallic bezel. The bezel is delicate and unbroken by any buttons, ports, or screws . . . These elements reflect the design principles of the iPhone, summarized by Mr. Stringer as an aesthetic impression of simplicity, calm, and quiet.

(CIB at 42.) The number and prominence of the features on the Galaxy Player 4.0, however, produce a more angular, busier impression than the D'757 patent. In each of the views of the D'757 patent and the Galaxy Player 4.0, I note a number of differences that contribute to the dissimilarity between the overall impression of the D'757 patent and the Galaxy Player 4.0. These differences are exemplified by figures RDX-37-21, RDX-37-22, RDX-37-23, and RDX-37-24. Although the following discussion addresses specific differences between the D'757 design and the Galaxy Player 4.0, I note that I considered these details is in the context of the overall impression created by the Galaxy Player 4.0.

The drawings below of the claimed design, prior art, and accused products are included to help elucidate my infringement analysis. The drawings are for illustrative purposes only as the test for design patent infringement requires a comparison of the claimed design with the actual accused product ((which I have done numerous times for all of the accused products), not the claimed design with a drawing of the accused design. The annotations to the drawings were included by Samsung and I accord them no weight.

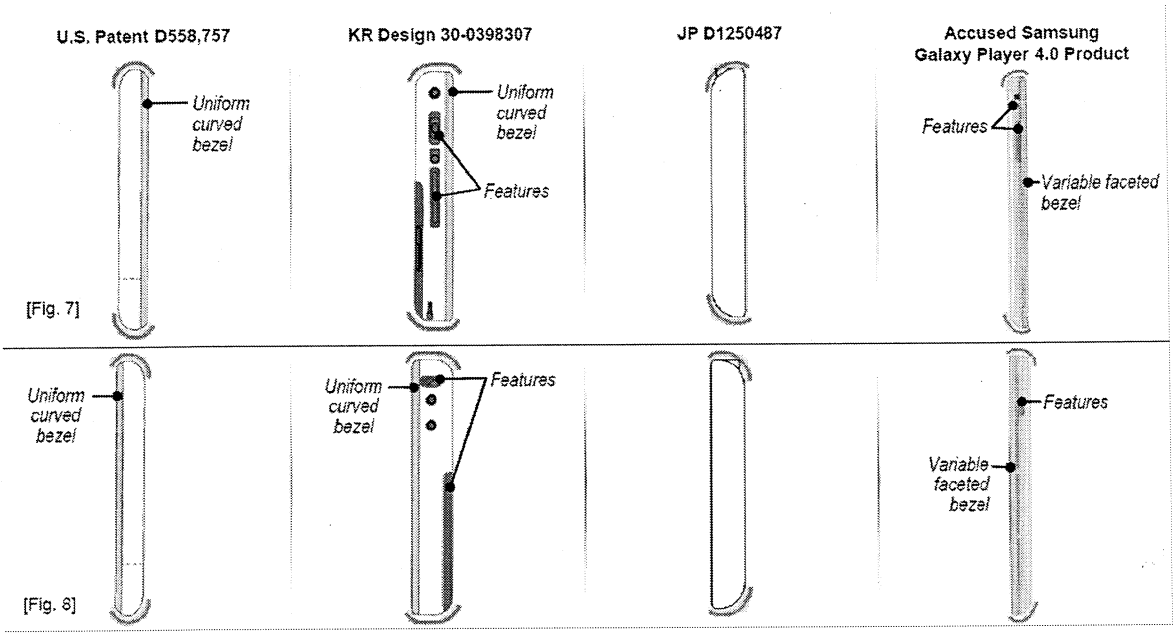

(RDX-37-24)

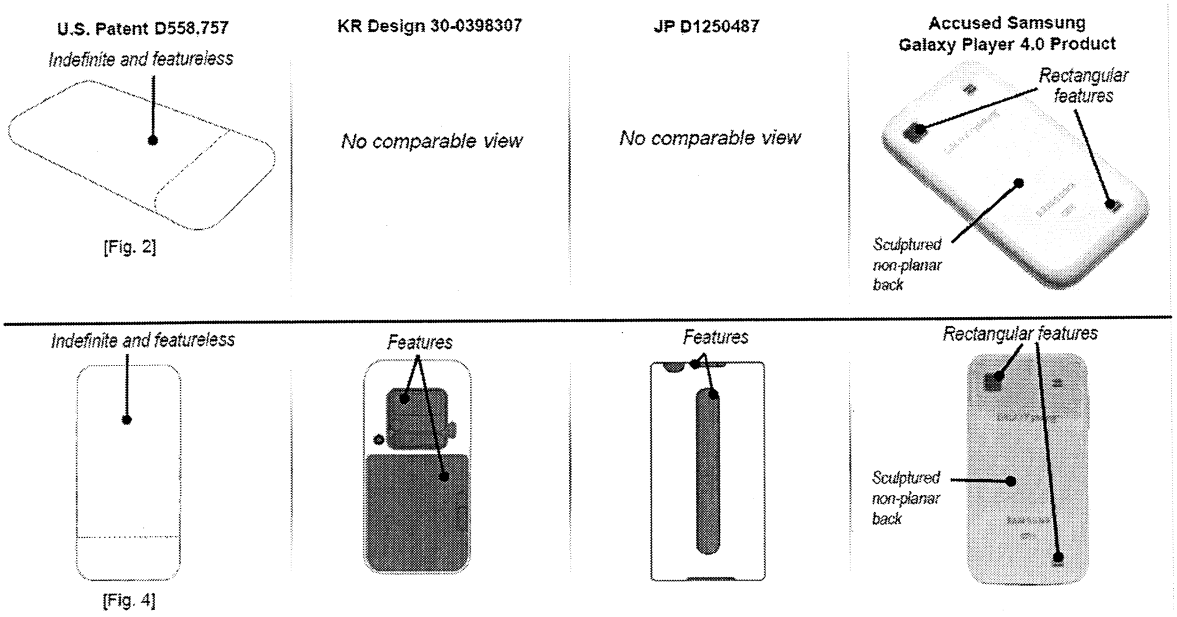

(RDX-37-22)

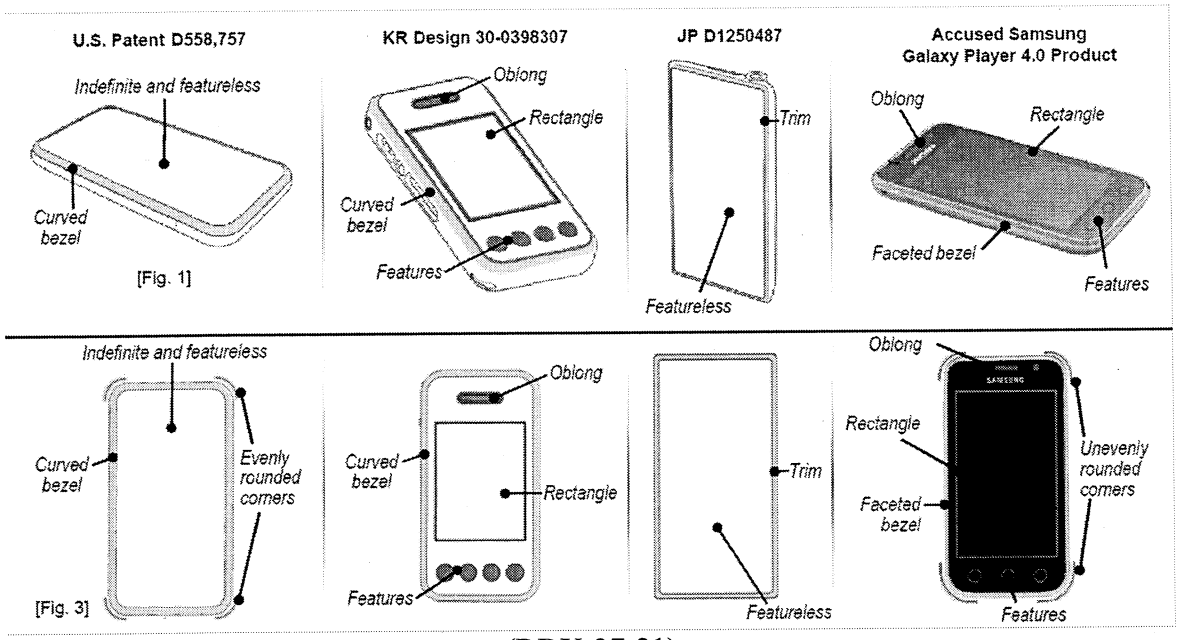

(RDX-37-21)

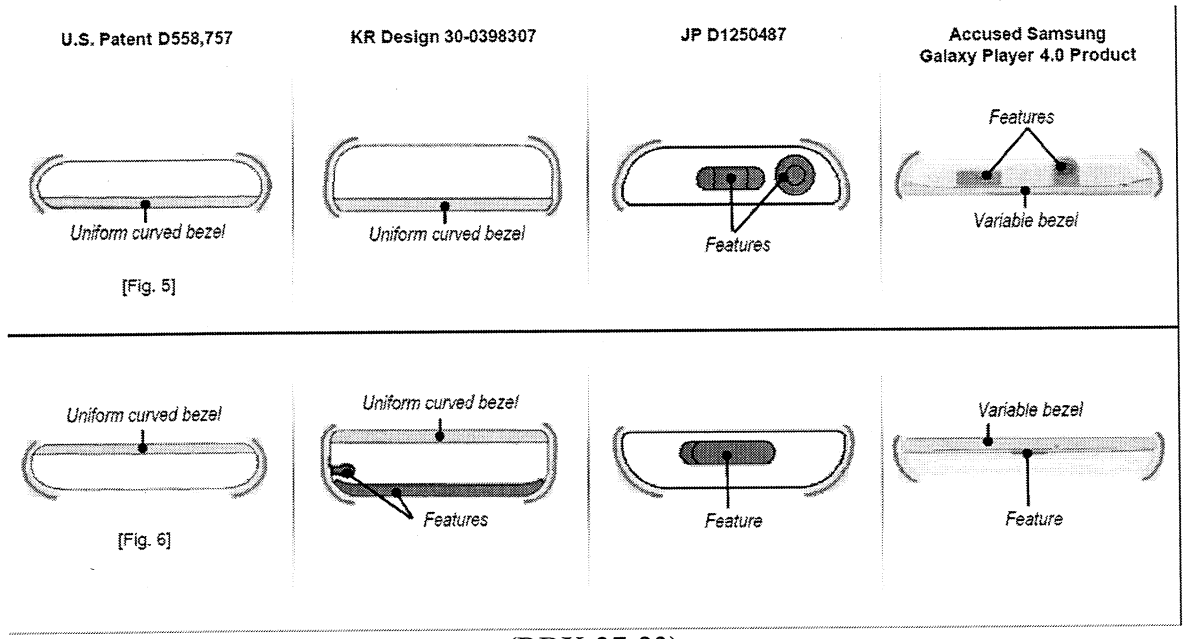

(RDX-37-23)

For example, the side views demonstrate the difference between the D'757 patent's impression of sleek minimalism and the Galaxy Player 4.0's angular, busy appearance. (*See*

RDX-37-24.) The Galaxy Player 4.0 has a different shape in the side view, appearing to have angular edges that taper in slightly toward the rear surface. (*Compare* JX-0001 *with* CPX-0053; *see also* RDX-37-28.) In contrast, the side views of the D'757 patent show rounded edges, a curved bezel which meets and joins with the rounded edges, and a distinct lack of detail or ornamentation—creating an uninterrupted and sleek impression. (Figs. 7 and 8, JX-0001.) The Galaxy Player 4.0 also has rectangular features seen in the side view that are noticeable because they protrude slightly, however, I note that these features tend to blend in with the rest of the side because of their similar coloring. (CPX-0053.)

In light of the prior art, the rear and rear perspective views also demonstrate the difference between the D'757 patent's impression of sleek minimalism and the Galaxy Player 4.0's busier impression. For example, the rear and rear perspective views of the D'757 patent show a flat back surface, rounded edges, and a distinct lack of detail or ornamentation—again creating an uninterrupted and sleek impression of simplicity. (Figs. 2 and 4, JX-0001.) In contrast, the Galaxy Player 4.0 has rectangular features which draw the observer's eye because of their contrasting coloring and prominence. (*Compare* JX-0001 *with* CPX-0053; *see also* RDX-37-22.)

In light of the prior art, the front and front perspective views also demonstrate the difference between the D'757 patent's minimalistic impression and the Galaxy Player 4.0's busier impression. For example, the front and front perspective views of the D'757 patent show a flat front surface which is co-planar with the bezel, rounded edges, and a distinct lack of detail or ornamentation—creating an uninterrupted and sleek impression of simplicity. In contrast, the Galaxy Player 4.0 has a reflective front surface with more rectangular features and a non-

coplanar bezel.[6] (*Compare* JX-0001 *with* CPX-0053; *see also* RDX-37-21.) As with the side views, however, these rectangular features tend to disappear into the background of the front face. (*See* CPX-0053.)

In light of the prior art, the bottom and top views also demonstrate the difference between the D'757 patent's impression of sleek minimalism and the Galaxy Player 4.0's angular, busy impression. For example, the top and bottom views of the D'757 patent show rounded edges, a curved bezel which meets and joins with the rounded edges, and a distinct lack of detail or ornamentation—creating an uninterrupted and sleek impression. (JX-0001.) In contrast, the Galaxy Player 4.0 has much more angular edges, an angular bezel which does not meet and join with the rounded edges, and a number of rectangular features including a protruding headphone port which draws the observer's eye. (*Compare* JX-0001 *with* CPX-0053; *see also* RDX-37-23.)

Accordingly, I find that an ordinary observer familiar with the prior art, giving such attention as a purchaser usually gives to the types of products at issue, considering the overall appearance and impression of the claimed design and the accused design, would find the Galaxy Player 4.0 is not substantially the same as the design of Apple's D'757 patent and thus does not infringe the D'757 patent.

---

[6] The bezel of the Galaxy Player 4.0 protrudes above the surface of the glass. I do not find this to be a prominent visual feature of the accused product. I have also found no case law in support of Samsung's argument that the tactile impression of the accused product is something an ordinary observer would take into account when considering if the design and the accused products are substantially similar. Nevertheless, if an ordinary observer would consider this difference, it would only strengthen my conclusion that an ordinary observer would consider the claimed design of the D'757 patent and the Galaxy Player 4.0 product to have impressions that are not substantially the same.

4. Galaxy Player 5.0 YP-G70/NAW

When comparing the claimed design to the **physical** exhibit of the Galaxy Player 5.0 (CPX-0054), I find that in light of the prior art the overall impression of the design claimed in the D'757 patent is substantially different than the Galaxy Player 5.0. The D'757 evinces a simplistic and minimalistic design described by Apple in their post hearing brief as

> smooth, continuous surfaces and rounded corners [with] a strong statement of continuity and harmony by encircling the oily pond with a uniform, thin, metallic bezel. The bezel is delicate and unbroken by any buttons, ports, or screws . . . These elements reflect the design principles of the iPhone, summarized by Mr. Stringer as an aesthetic impression of simplicity, calm, and quiet.

(CIB at 42.) The number and prominence of the features on the Galaxy Player 5.0, however, produce a more angular, busier impression than the D'757 patent. In each of the views of the D'757 patent and the Galaxy Player 5.0, I note a number of differences that contribute to the difference between the overall impression of the D'757 patent and the Galaxy Player 5.0. These differences are exemplified by figures RDX-37-25, RDX-37-26, RDX-37-27, and RDX-37-28. Although the following discussion addresses specific differences between the D'757 design and the Galaxy Player 5.0, the consideration of these details is in the context of the overall impression created with these details (or lack thereof).

The drawings below of the claimed design, prior art, and accused products are included to help elucidate my infringement analysis. The drawings are for illustrative purposes only as the test for design patent infringement requires a comparison of the claimed design with the actual accused product (which I have done), not the claimed design with a drawing of the accused design. The annotations to the drawings were included by Samsung and I accord them no weight.

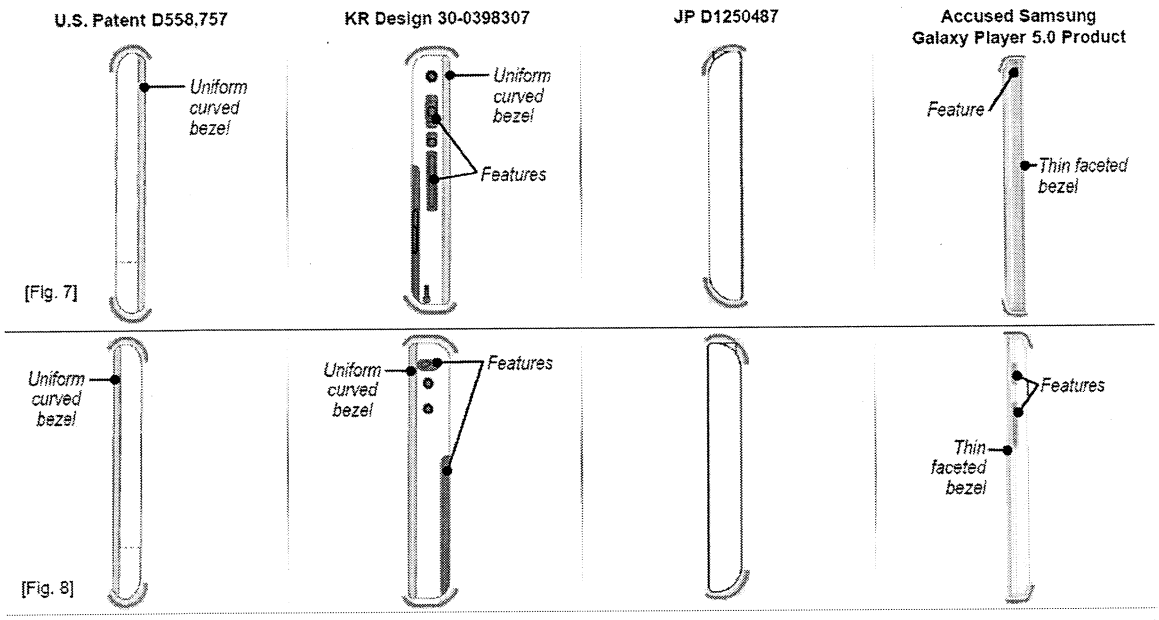

(RDX-37-28)

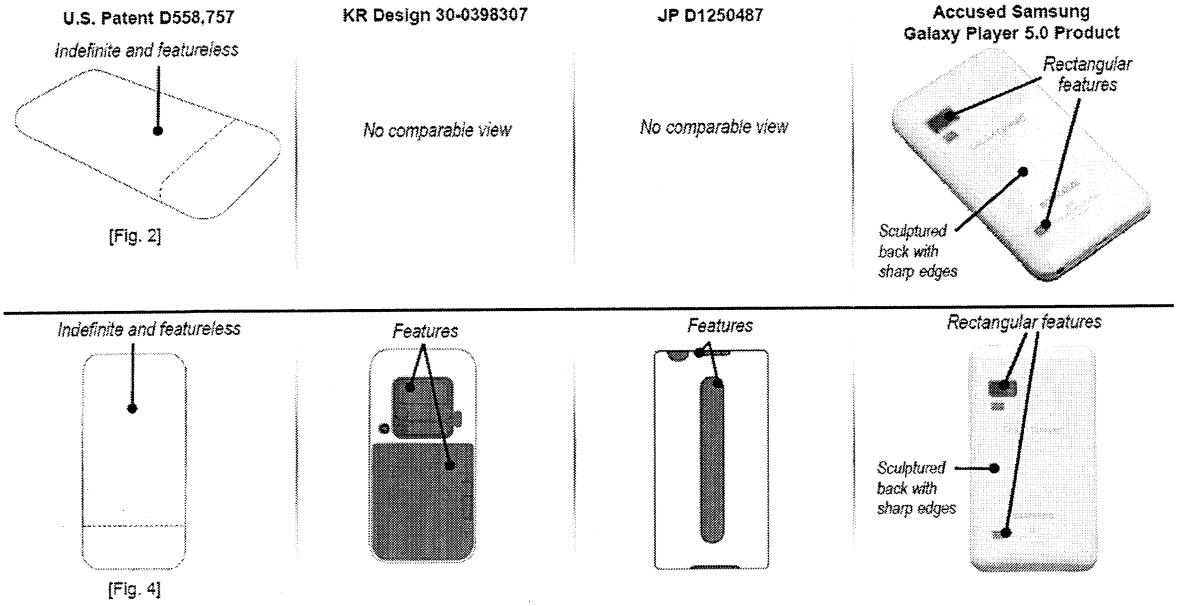

(RDX-37-26)

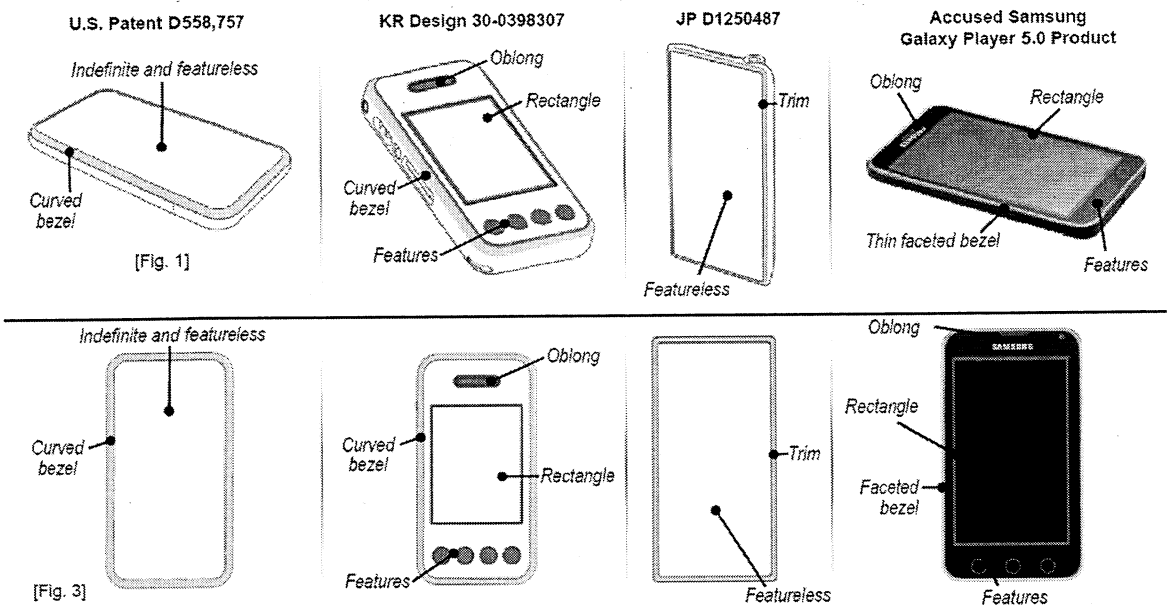

(RDX-37-25)

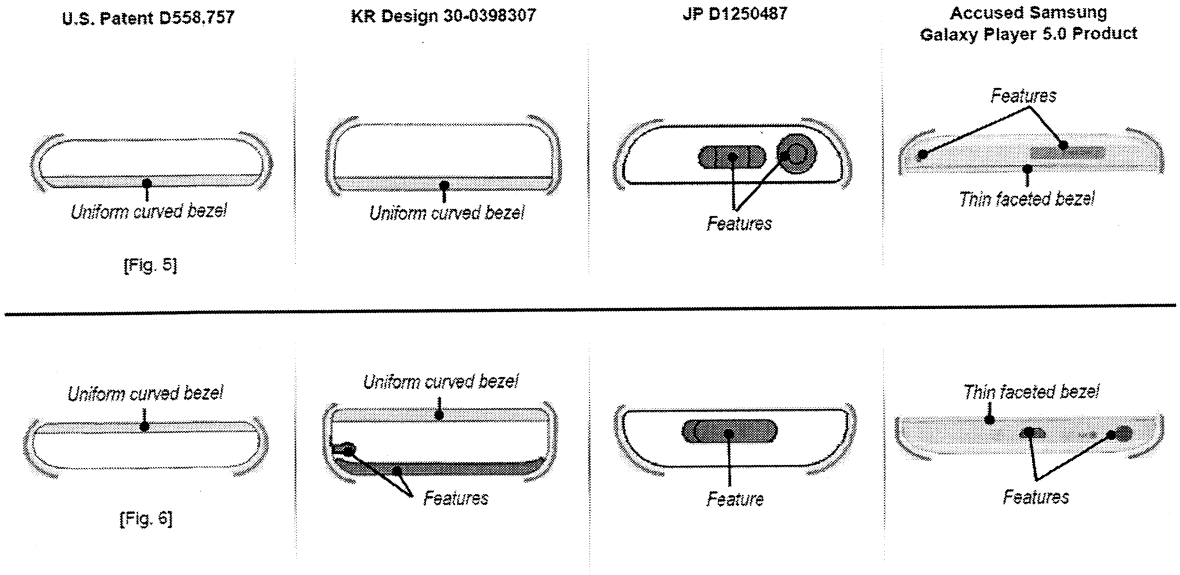

(RDX-37-27)

For example, the side views demonstrate the difference between the D'757 patent's impression of sleek minimalism and the Galaxy Player 5.0's angular, busy appearance. (*See* RDX-37-28.) The Galaxy Player 5.0 has a different shape in the side view, appearing to have

angular edges that taper in slightly toward the rear surface. (*Compare* JX-0001 *with* CPX-0054; *see also* RDX-37-28.) In contrast, the side views of the D'757 patent show rounded edges, a curved bezel which meets and joins with the rounded edges, and a distinct lack of detail or ornamentation—creating an uninterrupted and sleek impression. (Figs. 7 and 8, JX-0001.) The Galaxy Player 5.0 also has rectangular features seen in the side view that are noticeable because they protrude slightly, however, I find that these features tend to blend in with the rest of the side because of their similar coloring. (CPX-0054.)

In light of the prior art, the rear and rear perspective views also demonstrate the difference between the D'757 patent's impression of sleek minimalism and the Galaxy Player 5.0's busier impression. For example, the rear and rear perspective views of the D'757 patent show a flat back surface, rounded edges, and a distinct lack of detail or ornamentation—again creating an uninterrupted and sleek impression of simplicity. (Figs. 2 and 4, JX-0001.) In contrast, the Galaxy Player 5.0 has rectangular features which draw the observer's eye because of their contrasting coloring and prominence. (*Compare* JX-0001 *with* CPX-0054; *see also* RDX-37-26.)

In light of the prior art, the front and front perspective views also demonstrate the difference between the D'757 patent's minimalistic impression and the Galaxy Player 5.0's busier impression. For example, the front and front perspective views of the D'757 patent show a flat front surface which is co-planar with the bezel, rounded edges, and a distinct lack of detail or ornamentation—creating an uninterrupted and sleek impression of simplicity. In contrast, the Galaxy Player 5.0 has a reflective front surface with more rectangular features and a non-

coplanar bezel.[7] (*Compare* JX-0001 *with* CPX-0054; *see also* RDX-37-25.) As with the side views, however, these rectangular features tend to disappear into the background of the front face. (*See* CPX-0054.)

In light of the prior art, the bottom and top views also demonstrate the difference between the D'757 patent's impression of sleek minimalism and the Galaxy Player 5.0's angular, busy impression. For example, the top and bottom views of the D'757 patent show rounded edges, a curved bezel which meets and joins with the rounded edges, and a distinct lack of detail or ornamentation—creating an uninterrupted and sleek impression. (JX-0001.) In contrast, the Galaxy Player 5.0 has much more angular edges, an angular bezel which does not meet and join with the rounded edges, and a number of rectangular features which draw the observer's eye. (*Compare* JX-0001 *with* CPX-0054; *see also* RDX-37-27.)

Accordingly, I find that an ordinary observer familiar with the prior art, giving such attention as a purchaser usually gives to the types of products at issue, considering the overall appearance and impression of the claimed design and the accused design, would find the Galaxy Player 5.0 is not substantially the same design as claimed by Apple's D'757 patent and thus does not infringe the D'757 patent.

---

[7] The bezel of the Galaxy Player 5.0 protrudes above the surface of the glass. I do not find this to be a prominent visual feature of the accused product. I also have found no case law in support of Samsung's argument that the tactile impression of the accused product is something an ordinary observer would take into account when considering if the design and the accused products are substantially similar. Nevertheless, if an ordinary observer would consider this difference, it would only strengthen my conclusion that an ordinary observer would consider the claimed design of the D'757 patent and the Galaxy Player 5.0 product to have impressions that are not substantially the same.

5. Transform SPH-M920

When comparing the claimed design to the **physical** exhibit of the Transform (CPX-0138), I find that in light of the prior art the overall impression of the D'757 patent is substantially different than the Transform. The D'757 evinces a simplistic and minimalistic design described by Apple in their post hearing brief as

> smooth, continuous surfaces and rounded corners [with] a strong statement of continuity and harmony by encircling the oily pond with a uniform, thin, metallic bezel. The bezel is delicate and unbroken by any buttons, ports, or screws . . . These elements reflect the design principles of the iPhone, summarized by Mr. Stringer as an aesthetic impression of simplicity, calm, and quiet.

(CIB at 42.) The number and prominence of the features on the Transform, however, produces a more detailed, busier impression than the D'757 patent. Furthermore, in each of the views of the D'757 patent and the Transform, I note a number of differences that contribute to the dissimilarity between the overall impression of the design claimed by the D'757 patent and the Transform. These differences are exemplified by figures RDX-37-17, RDX-37-18, RDX-37-19, and RDX-37-20. Although the following discussion addresses specific differences between the D'757 design and the Transform, the consideration of these details is in the context of the overall impression created by the Transform.

The drawings below of the claimed design, prior art, and accused products are included to help explain my infringement analysis. The drawings are for illustrative purposes only as the test for design patent infringement requires a comparison of the claimed design with the actual accused product (which I have done), not the claimed design with a drawing of the accused design. The annotations to the drawings were included by Samsung and I accord them no weight.

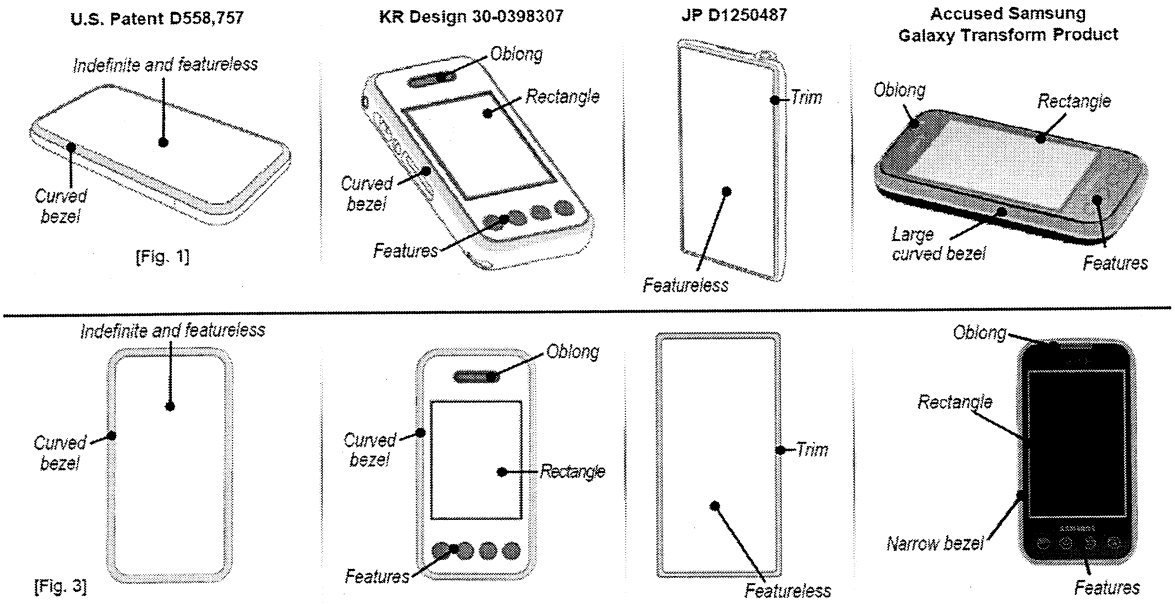

(RDX-37-17)

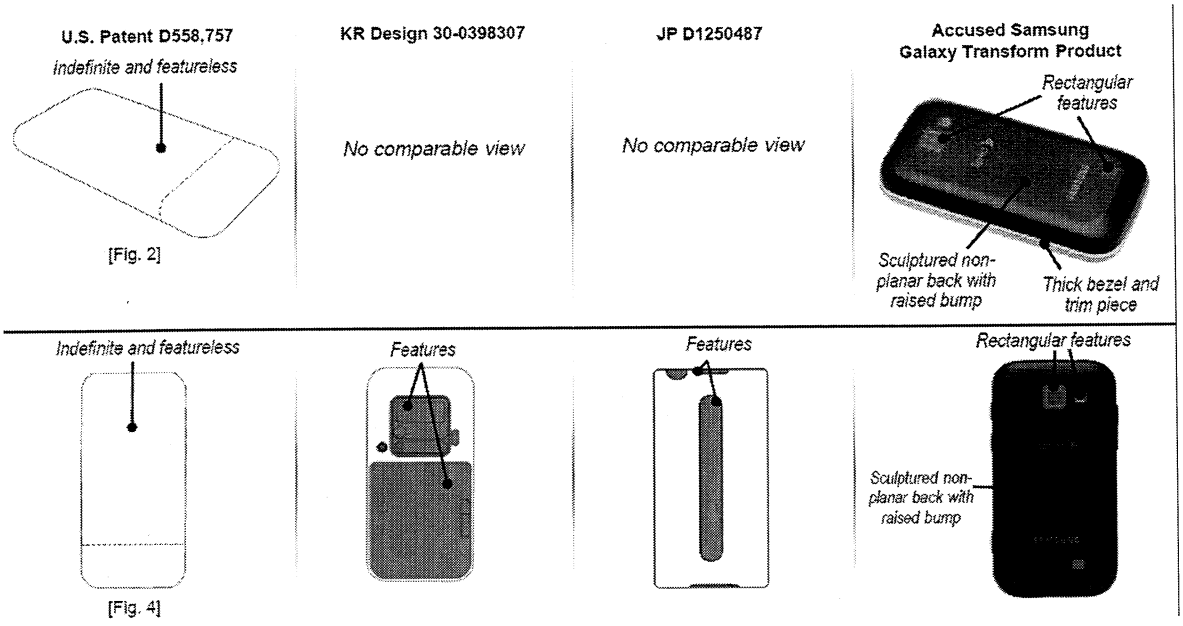

(RDX-37-18)

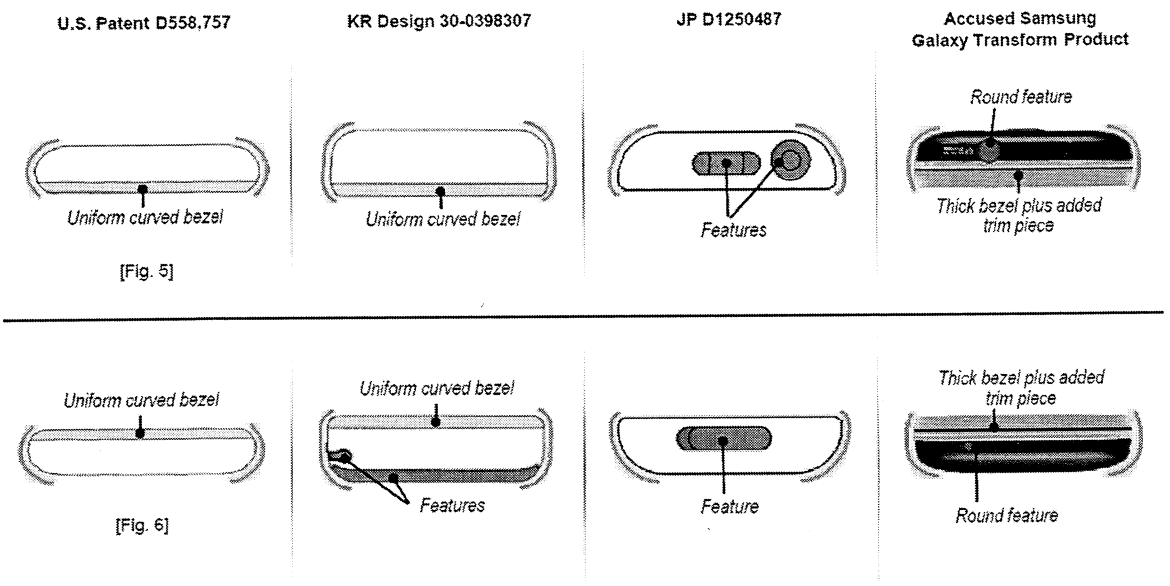

(RDX-37-19)

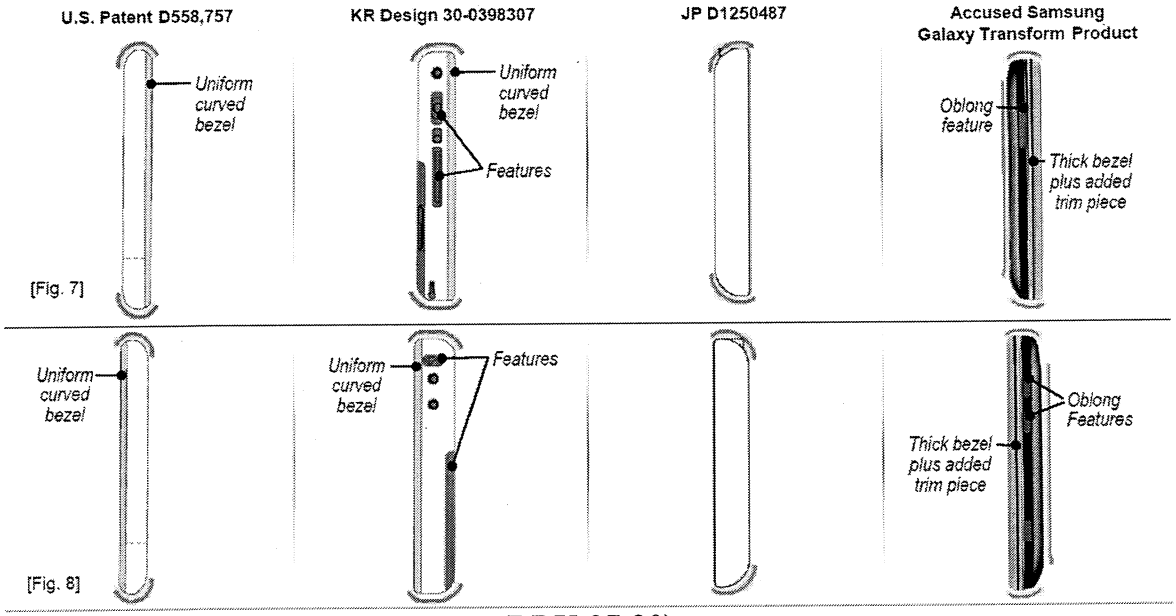

(RDX-37-20)

For example, the side views demonstrate the difference between the D'757 patent's impression of sleek minimalism and the Transform's busier appearance. (*See* RDX-37-20.) The Transform has a different shape in the side view, appearing to have angular edges that taper in

slightly toward the rear surface and an additional protrusion at the top of the side view. (CPX-0138; *see also* RDX-37-20.) In addition, the Transform has a double bezel. (*Id.*) On the other hand, the side views of the D'757 patent show rounded edges, a curved bezel which meets and joins with the rounded edges, and a distinct lack of detail or ornamentation—creating an uninterrupted and sleek impression. (Figs. 7 and 8, JX-0001.) The Transform also has rectangular features seen in the side view that are noticeable because they protrude slightly; however, I find these features tend to blend in with the rest of the side because of their similar coloring. (CPX-0138.)

In light of the prior art, the rear and rear perspective views also demonstrate the difference between the D'757 patent's impression of sleek minimalism and the Transform's busier impression. For example, the rear and rear perspective views of the D'757 patent show a flat back surface, rounded edges, and a distinct lack of detail or ornamentation—again creating an uninterrupted and sleek impression of simplicity. (Figs. 2 and 4, JX-0001.) In contrast, the Transform has a sculptured back surface and rectangular features which draw the observer's eye because of their contrasting coloring and prominence. (*Compare* JX-0001 *with* CPX-0138; *see also* RDX-37-18.)

In light of the prior art, the front and front perspective views also demonstrate the difference between the D'757 patent's minimalistic impression and Transform's busier impression. For example, the front and front perspective views of the D'757 patent show a flat front surface which is co-planar with the bezel, rounded edges, and a distinct lack of detail or ornamentation—creating an uninterrupted and sleek impression of simplicity. In contrast, the Transform has a reflective front surface with more rectangular features and a non-coplanar bezel.

(*Compare* JX-0001 *with* CPX-0138; *see also* RDX-37-17.) As with the side views, however, these rectangular features tend to disappear into the background of the front face. (*See* CPX-0138.)

In light of the prior art, the bottom and top views also demonstrate the difference between the D'757 patent's impression of sleek minimalism and the Transform's impression of detail. For example, the top and bottom views of the D'757 patent show rounded edges, a curved bezel which meets and joins with the rounded edges, and a distinct lack of detail or ornamentation—creating an uninterrupted and sleek impression. In contrast, the Transform has somewhat more angular edges, an angular bezel which does not meet and join with the rounded edges, and a number of rectangular features which draw the observer's eye. (*Compare* JX-0001 *with* CPX-0138; *see also* RDX-37-19.)

Accordingly, I find that an ordinary observer familiar with the prior art, giving such attention as a purchaser usually gives to the types of products at issue, considering the overall appearance and impression of the claimed design and the accused design, would find the Transform is not substantially the same design as claimed by Apple's D'757 patent and thus does not infringe the D'757 patent.

F. Validity of the D'757 Patent - Obviousness Under 35 U.S.C. § 103(a)

In addressing a claim of obviousness in a design patent, "the ultimate inquiry ... is whether the claimed design would have been obvious to a designer of ordinary skill who designs articles of the type involved." *Titan Tire Corp. v. Case New Holland, Inc.*, 566 F.3d 1372, 1375 (Fed. Cir. 2009) (quoting *Durling v. Spectrum Furniture Co.*, 101 F.3d 100, 103 (Fed. Cir. 1996).)

> To determine whether one of ordinary skill would have combined teachings of the prior art to create the same overall visual appearance as the claimed design, the finder of fact must employ a two-step process. First, one must find a single reference, a something in existence, the design characteristics of which are basically the same as the claimed design. Second, other references may be used to modify [the primary reference] to create a design that has the same overall visual appearance as the claimed design.

Apple, Inc. v. Samsung Electronics Co., Ltd., 678 F.3d 1314, 1329 (Fed. Cir. 2012.) (internal quotations and citations omitted). However, the "secondary references may only be used to modify the primary reference if they are so related to the primary reference that the appearance of certain ornamental features in one would suggest the application of those features to the other." *Durling v. Spectrum Furniture Co.*, 101 F.3d 100, 103 (Fed. Cir. 1996) (internal quotations omitted). "[W]hether to combine earlier references to arrive at a single piece of [hypothetical] art for comparison with the potential design or to modify a single prior art reference" is also determined from the point of view of a designer of ordinary skill in the art. *Int'l Seaway Trading Corp. v. Walgreens Corp.*, 589 F.3d 1233, 1240 (Fed. Cir. 2009). However, "[o]nce that piece of [hypothetical] prior art has been constructed, obviousness, like anticipation, requires application of the ordinary observer test" and a "focus on the *overall* designs." *Id.* at 1240-41.

1. Japanese Design Patent JP D1250487

The Parties' Positions

Apple argues that the JP487 does not create basically the same visual impression as the D'757 patent and thus it cannot serve as a primary reference. (CIB at 47.) Apple argues that modifying the JP487 design with an unadorned back, as Samsung suggests, would not address

the many other modifications necessary to make it look substantially the same as the D'757 design. (*Id.*)

Samsung argues that construed broadly, the front view of the JP487 discloses a design very similar to the D'757 patent and serves as a primary reference. (RIB at 64.) Samsung argues that both designs show rectangular forms with rounded corners framing the face. (*Id.*) Samsung also argues that the perspective views are also some more, showing thin rectangular forms with Truman in front and curved edges. (*Id.*) Samsung argues that although the back of the JP487 contains features not found in the D'757 patent it wouldn't obvious to modify the JP487 to remove them to enhance comfort in usability and reduce manufacturing costs and potential breakage. (*Id.* at 64-65.) Samsung argues that other references disclosed an unadorned back. (*Id.*) Thus Samsung argues because of the portable and tried devices with unadorned back for publicly disclosed prior to the D'757 patent, such prior art references indicate the obviousness of such a solution. (*Id.*)

The Staff argues that the evidence has shown that the JP487 patent is not a proper primary reference and that the patent therefore does not render the claimed D'757 design obvious. (SIB at 29.) The Staff argues that in contrast to the D'757 design, which includes a rectangular body with evenly curved corners, the JP487 design includes a body having corners that are substantially sharper than the D'757 design. (*Id.* at 29-30.) Staff argues that the evidence has shown that unlike the D'757 claimed design, the JP487 design includes a prominent circular headphone jack protruding from the top of the device. (*Id.* at 30.) The Staff argues in further contrast the D'757 design, the top and bottom views of the JP487 design have significant adornments. (*Id.*)

Analysis

Samsung argues that the claimed D'757 design would have been obvious in light of Japanese Design Patent JP D1250487 ("JP487") in view of KR30-0304213, JP887388, and D504,889. JP487 was filed on November 25, 2004, which is more than one year before the effective filing date of the D'757 patent. (RX-2750; JX-001, cover page.) Thus, JP487 is prior art under 35 U.S.C. § 102 (b). An illustration of both the JP487 design and D'757 design is shown below.

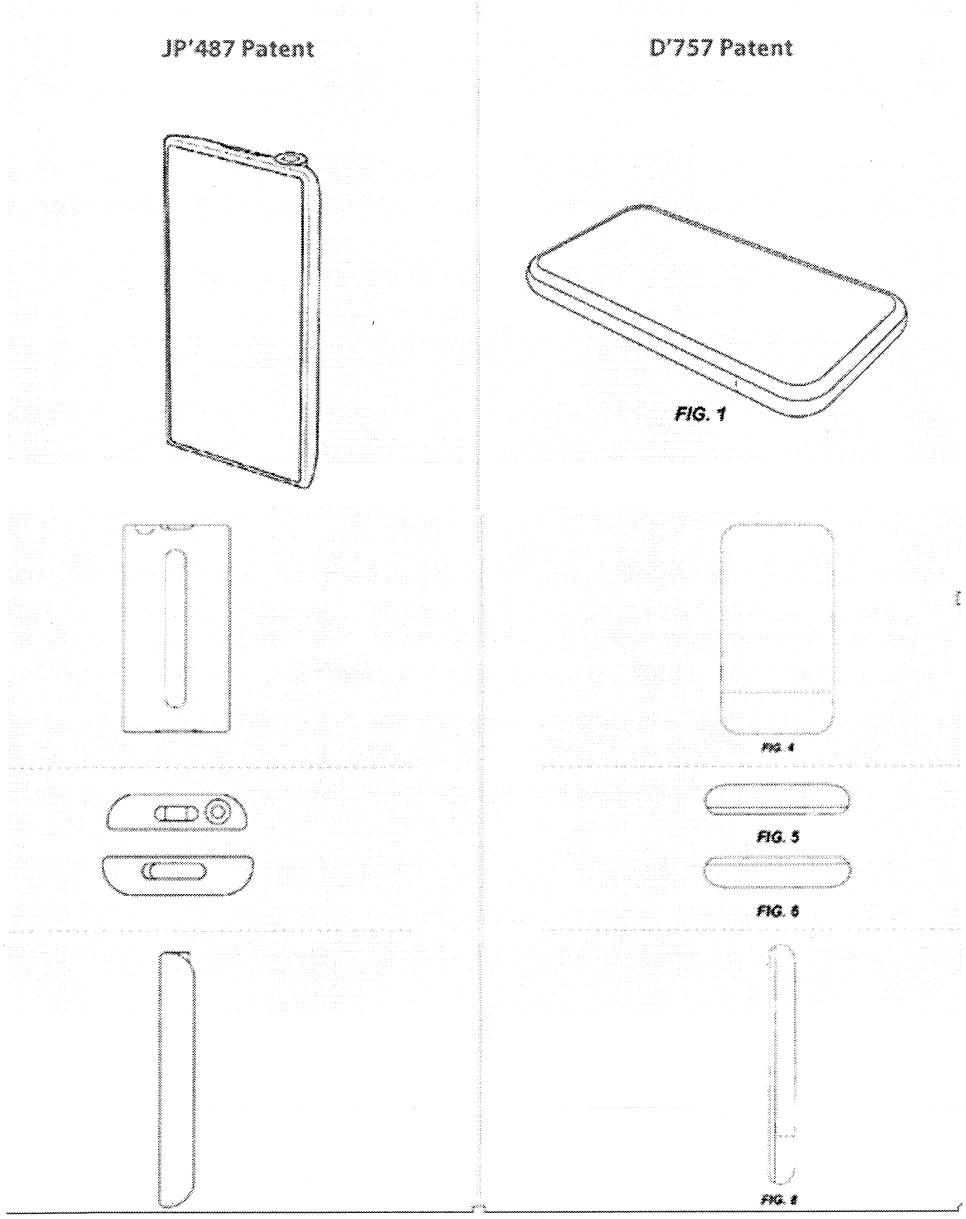

Although Samsung contends that JP487 is similar to the D'757 design, the overall visual impression of the JP487 would require major modifications to look similar to the D'757 design. For example, while the circular headphone jack protruding from the top of JP487 is a prominent feature of the device, no such analogous feature exists in the D'757 design. Also, there are

differences in the corners of JP487 and the D'757 design. The corners of JP487 are sharp in comparison to the round corners in the D'757 design, thus giving a much more angular visual impression than the soft, curved impression given by the D'757 patent. Further, the sleek minimalistic appearance of the D'757 design is contrasted by the back, top and bottom profile views of JP487, which show significant adornments, including a large lozenge-shaped feature on the back. Thus, for the reasons above, I do not find JP487 to be sufficiently the same as the claimed design to constitute a primary reference for purposes of obviousness.

Moreover, even if JP487 was found to be a primary reference, Samsung still fails to explain why the secondary references it lists qualify as prior art, why one of ordinary skill in the art would combine the primary and secondary designs, and whether the combined alleged prior art designs would have the same overall visual impression as the D'757 design. Samsung only discusses modifying JP487 design with an unadorned back, but does not address the many other modifications necessary to make JP487 look substantially the same as the D'757 design.

Accordingly, I find Samsung has failed to show by clear and convincing evidence that the claimed design in the D'757 patent is obvious in light of JP487.

2. Korean Design Registration 30-0304213

Samsung argues that the design claimed in the D'757 patent is obvious in light of Korean Design Registration 30-0304213 ("KR213"). Samsung's entire argument regarding the KR213 is stated in Samsung's initial post-hearing brief as follows:

> Korean design registration 30-0304213 (KR'213) (RX-0371), published in August 2002, can serve as an obviousness reference to the extent the D'757 patent is construed broadly. It also demonstrates further that rectangular devices with rounded corners and large, flat, unornamented surfaces were known in the prior art, and would be familiar to the ordinary observer.

(RIB at 65.) Samsung did not raise this argument in its pre-hearing brief and thus in accordance with Ground Rule 9.2 it is hereby struck. Regardless, the above paragraph is insufficient on its face to constitute a *prima facia* case of obviousness. Not only does Samsung fail to show that the KR213 is a primary reference, but Samsung does not even set forth any secondary references. Accordingly, even if the reference was not struck, I would find Samsung failed to prove by clear and convincing evidence that the claim of the D'757 patent was obvious in light of the KR213.

G. Technical Prong of the Domestic Industry Requirement

"[T]he technical prong requires proof that the patent claims cover the articles of manufacture that establish the domestic industry." *Crocs*, 598 F.3d at 1307. With respect to design patents, this requires applying *Gorham's* ordinary observer test to compare the overall impressions of the design of the Domestic Industry products and the asserted designs. *See id.* (finding the "overall effects of the design present in both the '789 patent and Crocs shoes" to be substantially the same in the eyes of the ordinary observer).

Parties' Positions

Apple contends its iPhone 3G and iPhone 3GS practice the D'757 patent because the overall visual impression of their designs would be viewed by an ordinary observer as substantially the same as the D'757 design. (CIB at 68-70.)

D'757 Patent	iPhone 3GS (CPX-5)
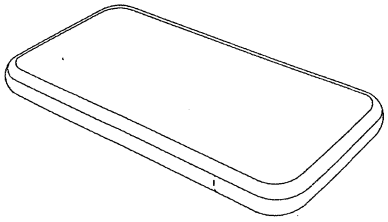	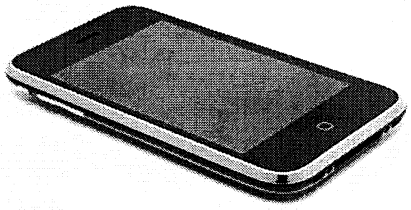
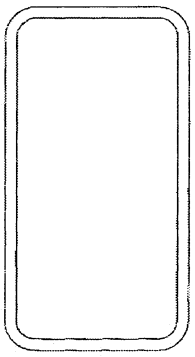	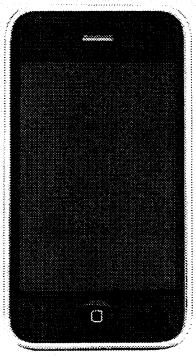
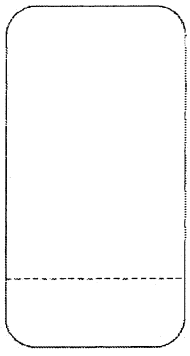	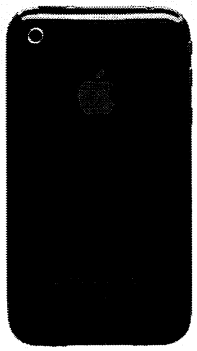

D'757 Patent	iPhone 3GS (CPX-5)
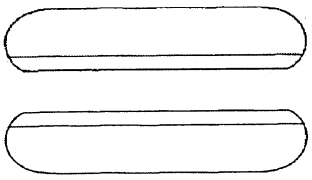	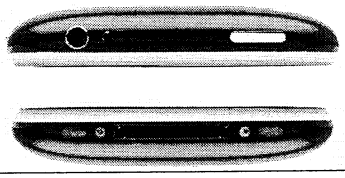
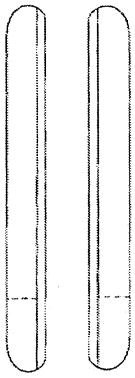	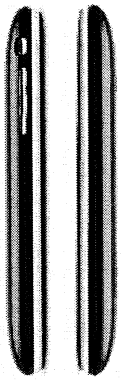

Although Apple admits a few differences between the D'757 design and the D'757 Domestic Industry products, Apple contends that the features on the front face of the iPhone 3GS either do not disrupt the ordinary observer's overall visual impression created by the flat front face, the bezel, and the body of the D'757 design or constitute a trademark that plays no part in the ordinary observer test. (CIB at 70.)

The Staff believes that the claimed design of the D'757 patent is substantially the same as at least the iPhone 3G. (SIB at 31.) Furthermore, the Staff believes that Samsung's analysis of the technical prong of domestic industry with respect to the D'757 patent is cursory and incomplete. (SIB at 31.) In addition, as previously indicated, the Staff believes that Apple's construction should be adopted over Samsung's construction. (*Id.*) As such, and in light of the foregoing analysis regarding the Domestic Industry products provided by Apple, the Staff

believes the evidence has shown that the iPhone devices practice the claimed design of the D'757 patent. (*Id.* at 31-32.)

Samsung makes a number of arguments to support its contention that the D'757 Domestic Industry products do not practice the D'757 patent. First, Samsung contends the iPhone, iPhone 3G, and iPhone 3GS all have transparent and reflective front surfaces, which makes them all fundamentally different than the D'757 design. (RIB at 58.) Samsung also contends the D'757 design has an entirely blank front face devoid of any detail such as buttons, display screen, apertures, interruptions or features, while the iPhone, iPhone 3G, and iPhone 3GS all have a large rectangular screen on the front, an oblong-shaped opening for a speaker, circular elements for sensors, border masks, and a circular button on the bottom of the front surface. (*Id.*). Along those same lines, Samsung contends that the rear surfaces of the iPhones also have details not disclosed in the D'757, such as cameras and an Apple logo image in contrasting colors and physical buttons, ports and speakers on the left side, top and bottom. (*Id.* at 61-62.)

In addition, Samsung contends the iPhone 3G and 3GS do not have the same shape as the D'757 patent because the D'757 has a flat back but the iPhone 3G/3GS design has a curved back. (RIB at 58-62).

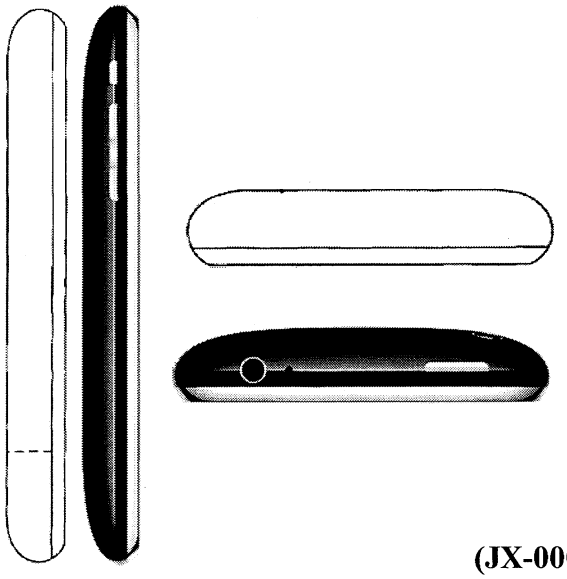

(JX-0001; CPX-0005).

Analysis

When comparing the D'757 patent claims to the **physical** exhibits of the D'757 Domestic Industry products, I find that in light of the prior art the overall impression of the D'757 patent is substantially the same as the D'757 Domestic Industry products. In each of the views of the D'757 patent and the D'757 Domestic Industry products, I note a number of differences that contribute to the similarity between the overall impression of the D'757 patent and the D'757 Domestic Industry products. Although the following discussion addresses specific details of the D'757 design and the D'757 Domestic Industry products, the consideration of these details is in the context of the overall impression created with these details (or lack thereof).

The side views demonstrate the similarity between the D'757 patent's impression of sleek minimalism and the D'757 Domestic Industry products' appearances. For example, the side views of the D'757 patent show a flat back surface, rounded edges, a curved bezel which meets and joins with the rounded edges, and a distinct lack of detail or ornamentation—creating an uninterrupted and sleek impression. (*See* JX-0001.) Although the iPhone 3GS has a non-flat

back and a slightly different curvature, these differences are slight and would not demonstrate a significant difference to an ordinary observer. (*Compare* JX-0001 *with* CPX-0003, CPX-0004, CPX-0005.)

The rear and rear perspective views also demonstrate the similarity between the D'757 patent's impression of sleek minimalism and the D'757 Domestic Industry products' impressions. For example, the rear and rear perspective views of the D'757 patent show a flat back surface, rounded edges, and a lack of detail or ornamentation—again creating an uninterrupted and sleek impression of simplicity. (*See* JX-0001.) Similarly, the D'757 Domestic Industry products have a flat back surface with rounded edges and a lack of ornamentation. (*Compare* JX-0001 *with* CPX-0003, CPX-0004, CPX-0005.) Samsung contends that additional features on the back of the D'757 Domestic Industry products create an impression that is not substantially similar to the D'757 patent. While the Apple trademark is prominent on the back of the D'757 Domestic Industry products, trademarks are not considered in the ordinary observer test and thus this feature cannot contribute to a difference between the D'757 patent and the D'757 Domestic Industry products. *See, e.g.*, *L.A. Gear*, 988 F.2d at 1126 & 1133-34 (infringer's use of trademarks, described as "well-known" and "recognized by consumers," did not avoid finding of the design patent infringement). Furthermore, the additional details cited by Samsung are slight and would not demonstrate a significant difference to an ordinary observer. (*Compare* JX-0001 *with* CPX-0003, CPX-0004, CPX-0005.)

The front and front perspective views also demonstrate the similarity between the D'757 patent's impression of sleek minimalism and the D'757 Domestic Industry products' impression. For example, the front and front perspective views of the D'757 patent show a flat front surface

which is co-planar with the bezel, rounded edges, and a lack of detail or ornamentation—creating an uninterrupted and sleek impression of simplicity. (*See* JX-0001.) Likewise, the D'757 Domestic Industry products have a co-planar with the bezel, rounded edges, and a distinct lack of detail or ornamentation. (*Compare* JX-0001 *with* CPX-0003, CPX-0004, CPX-0005.) Although the D'757 Domestic Industry products all have a rectangular screen on the front, an oblong-shaped opening for a speaker, circular elements for sensors, border masks, and a circular button on the bottom of the front surface, these features tend to disappear into the background of the front face and do not alter the overall impression of simplicity of the D'757 Domestic Industry products. (*See* CPX-0003, CPX-0004, CPX-0005.)

The bottom and top views also demonstrate the similarity between the D'757 patent's impression of sleek minimalism and the D'757 Domestic Industry products' impression. For example, the top and bottom views of the D'757 patent show rounded edges, a curved bezel which meets and joins with the rounded edges, and a lack of detail or ornamentation—creating an uninterrupted and sleek impression. (*See* JX-0001.) Similarly, the D'757 Domestic Industry products have rounded edges and a curved bezel which meets and joins with the rounded edges. (*Compare* JX-0001 *with* CPX-0003, CPX-0004, CPX-0005.) Samsung contends that additional features on the top and bottom of the D'757 Domestic Industry products create an impression that is not substantially similar to the D'757 patent. These features tend to disappear into the background of the front face, however, and do not alter the overall impression of simplicity of the D'757 Domestic Industry products. (*See* CPX-0003, CPX-0004, CPX-0005.)

Samsung's suggestion that the iPhone 3G or 3GS cannot practice the D'757 patent if they embody later-issued Apple patents is not supported by the law. Federal Circuit law is clear that a

product may practice multiple patents. *See Hoechst Celanese Corp. v. BP Chems. Ltd.*, 78 F.3d 1575, 1582 (Fed. Cir. 1996) ("[T]he fact of separate patentability presents no legal or evidentiary presumption of non-infringement."); *see also Keystone*, 2001 U.S. Dist. LEXIS 26272, at *12-15 (excluding evidence of subsequently-issued patents as they were not "relevant to the question of whether the accused Rockwood blocks are 'substantially similar' to the design disclosed in the '560 patent"). In *Gorham*, the Supreme Court found that defendant White's silverware designs, which practiced White's own patents, also infringed plaintiff Gorham's patent. *Gorham*, 81 U.S. at 530-31.

Accordingly, I find that an ordinary observer, giving such attention as a purchaser usually gives to the types of products at issue, considering the overall appearance and impression of the claimed design and the D'757 Domestic Industry products, would find the D'757 Domestic Industry products are substantially the same design as claimed in Apple's D'757 patent and thus practice the D'757 patent.

VI. U.S Patent No. D618,678

A. Introduction

U.S. Patent No. D618,678 ("D'678 Patent"), titled "Electronic Device," issued on June 29, 2010. (JX-0002, coverpage.) The D'678 patent issued from U.S. Patent App. Serial No.29/332,683, filed on February 23, 2009. (*Id.*) The inventors are Bartley K. Andre, Daniel J. Coster, Daniele De Iuliis, Richard P. Howarth, Jonathan P. Ive, Steve Jobs, Duncan Robert Kerr, Shin Nishibori, Matthew Dean Rohrbach, Douglas B. Satzger, Calvin Q. Seid, Christopher J. Stringer, Eugene Antony Whang, and Rico Zorkendorfer. (*Id.*) The D'678 patent is assigned to Apple, Inc. (*Id.*)

B. Asserted Claims

The D'678 is a design patent and as such has only one claim, which reads as follows:

> We claim the ornamental design for an electronic device, substantially as shown and described.

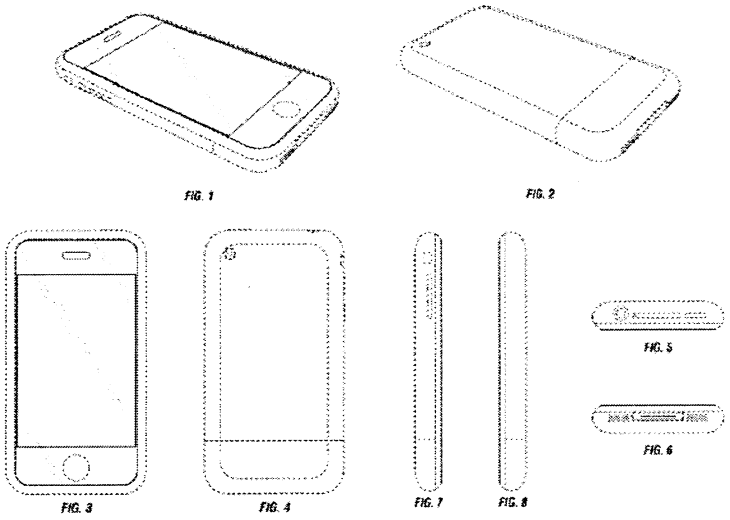

[JX-0002 D'678, Figs. 1-8]

C. Level of Ordinary Skill in the Art

Apple suggests a person of ordinary skill in the relevant art is one holding a Bachelors of Science degree or its equivalent in industrial or product design, and having at least two years of work experience as an industrial designer, including experience in the design of electronic devices. (CIB at 30.) The Staff suggests the designer of ordinary skill in the art pertaining to the D'678 patent is a person who holds a Bachelors of Science degree or its equivalent in industrial or product design and has at least two years of work experience as an industrial designer, including experience in the design of electronic devices. (SIB at 22.) Samsung suggests a person of ordinary skill in the art relevant to Apple's asserted design patents would have experience designing electronic devices including, but not limited to, mobile devices, such as

cellular telephone handsets and other electronic devices, or be a designer in academia who conducted research on the interface of products to people or taught industrial design students the design of electronic devices. (RIB at 64, 103.) Whereas Apple cites to the testimony of its expert in support of its proposed level of ordinary skill, Samsung relies only on attorney argument.

Thus, in light of the evidence, I find that a designer of ordinary skill in the art pertaining to the D'678 patent is a person who holds a Bachelors of Science degree or its equivalent in industrial or product design and has at least two years of work experience as an industrial or product designer, including experience in the design of electronic devices.

D. Claim Construction

The infringement analysis for a design patent begins with construing the claimed design. *Arminak & Assocs. v. Saint-Gobain Calmar, Inc.*, 501 F.3d 1314, 1319 (Fed. Cir. 2007).

The design patent claim scope "encompasses its visual appearance as a whole, and in particular the visual impression it creates." *Arminak & Assocs.*, 501 F.3d at 1319-20 (internal quotations omitted). Design patents do not cover broad design concepts, however, and are limited by the specific ornamental features depicted in the patent. *See OddzOn Prods., Inc. v. Just Toys, Inc.*, 122 F.3d 1396, 1405 (Fed. Cir. 1997) (finding that proper construction did not encompass broad design concept of "rocket-like tossing ball"); *Contessa Food Prods., Inc. v. Conagra, Inc.*, 282 F.3d 1370, 1377 (finding the district court properly avoided the "broader general design concept" in construing patent).

The Court of Appeals for the Federal Circuit has cautioned trial courts to avoid excessive reliance on a detailed verbal description of the design in construing the claim. *Crocs, Inc. v. ITC*,

598 F.3d 1294, 1302 (Fed. Cir. 2010) (citing *Egyptian Goddess, Inc. v. Swisa, Inc.*, 543 F.3d 665, 679 (Fed. Cir. 2008) (en banc)). "Given the recognized difficulties entailed in trying to describe a design in words, the preferable course ordinarily will be for a district court not to attempt to 'construe' a design patent claim by providing a detailed verbal description of the claimed design." *Egyptian Goddess, Inc.*, 543 F.3d at 679. A court's decision regarding the level of detail to be used in describing the claimed design, though, "is a matter within the court's discretion, and absent a showing of prejudice, the court's decision to issue a relatively detailed claim construction will not be reversible error." *Id.*

Although the Federal Circuit has repeatedly cautioned about the dangers of presenting a full description of the claimed design, the Federal Circuit has nevertheless stated that a court may find it helpful to point out various features of the claimed design in relation to the accused design and the prior art. *See Egyptian Goddess, Inc.*, 543 F.3d at 680 ("In a case such as this one, for example, there would be nothing wrong with the court pointing out to a jury that in the patented design only three sides have buffers attached, while in the accused product (and in the three-sided Nailco patent), all of the sides have buffers attached."). The trial court may also address particular conventions in design patent drafting, such as the role of dashed lines. *Contessa Food Prods., Inc.*, 282 F.3d at 1378 (approving the district court's explanation of the use of dashed lines in the asserted design patent).

Parties' Positions

Apple contends the D'678 patent protects the iconic design of the iPhone's front face, which has appeared in every generation of the iPhone to date. (CIB at 36.) Apple characterizes the design as

> [A] single continuous piece of transparent material that is rectangular in overall shape with evenly curved corners. The transparent material is flat and extends edge-to-edge across the entire front surface. Visible in this transparent material is a rectangular element surrounded by narrow balanced borders on the lateral sides and wider balanced borders above and below. There is a lozenge-shaped element horizontally centered in the area above the rectangular element . . . The grouping of these features is distinctive in shape, proportion, placement, and overall visual impression.

(*Id.* at 36-37.)

The Staff cites to the testimony of Apple witness Mr. Stringer, which states:

> The D'678 patent shows the transparent flat front surface of the iPhone. It reflects the fundamental idea behind the appearance of the original iPhone, as I explained previously. Figures 1 and 3 show a generally rectangular shape with four evenly radiused corners, a flat transparent front surface, and a symmetrically placed inner rectangular design element with wide borders surrounding it at the top and bottom and narrower borders on the sides. There is a lozenge-shaped design element centered above the inner rectangular design element. This lozenge shape corresponds to the receiver opening in an actual iPhone. The flat geometry of the front surface of the design is further shown by Figures 5, 6, 7, and 8. The claimed front surface is defined by a straight, solid line extending across the full front of the otherwise disclaimed electronic device in each of those figures. I believe that it is clear that the claimed design is limited to a transparent flat surface, regardless of its placement in relation to the remainder of the device, because the broken line indicating the disclaimed environmental structure and the full line indicating the claimed flat transparent surface are nearly superimposed on one another.

(SIB at 19.) The Staff argues that Apple's construction of the D'678 patent should be adopted. (*Id.*)

Samsung alleges that the design claimed in the D'678 patent should be construed as a front surface that is entirely co-planar and continuous, borders to the left and right of the interior rectangle that are extremely narrow, an oblong feature of the shape shown in the drawings of the D'678 patent that is co-planar with the rest of the front, or ornamented on the surface of the device, and positioned symmetrically both horizontally and vertically in the upper border, no additional detail on the front surface, an external rectangular shape with four evenly rounded

corners of the shape and proportion shown in the drawings of the D'678 patent, a reflective, highly polished, or transparent surface that extends to the outside perimeter, a display screen and a clear cover over the display that cannot be claimed. (RIB at 71-73.)

Samsung also contends that the patents must be construed narrowly in view of their alleged functional elements. (*Id.* at 74.) Samsung alleges the D'678 patent must be construed to factor out functional elements because design patents protect only ornamental features. (*Id.*) Samsung alleges the display, the transparent cover over the display, and the receiver speaker located in the upper portion of the front face are functional. (*Id.* at 74-75.)

Analysis

A design patent only protects the nonfunctional aspects of an ornamental design. *Elmer v. ICC Fabricating, Inc.*, 67 F.3d 1571, 1577 (Fed. Cir. 1995) (citing *Keystone Retaining Wall Sys., Inc. v. Westrock, Inc.*, 997 F.2d 1444, 1450 (Fed. Cir. 1993)). A claimed element is functional "if it is essential to the use or purpose of the article or if it affects the cost or quality of the article." *Amini,* 439 F.3d at 1371 (internal quotations omitted). To be excluded from protection based on functionality, the particular aspect of the claimed design must be *dictated* by function. *See Richardson v. Stanley Works, Inc.*, 597 F.3d 1288, 1293 (Fed. Cir. 2010) (*emphasis added*). Thus, the fact that an aspect of the claimed design has some function does not necessarily require its exclusion from protection. *See Richardson*, 597 F.3d at 1294 (factoring out certain elements of the claimed design due to the elements being driven "*purely* by utility") (*emphasis added*).

Samsung's argument that functional elements must be discarded is insufficient as a matter of law as it confuses elements having functionality with elements dictated by function

alone. *See Richardson*, 597 F.3d at 1293. Although as Samsung alleges, certain elements of the device to which the claimed designs pertain are functional, I find that the design characteristics of these elements and the overall claimed designs are not dictated by function.

Samsung specifically alleges the display feature and the speaker slot on a mobile telephone are functional. However, the evidence suggests that having a display or speaker slot with particular characteristics (e.g., shape, size, etc.), is not dictated by function. *L.A. Gear, Inc.*, 988 F.2d at 1123; *see also* Tr. 797:22-798:10, Tr. 799:10-25 (testimony of Mr. Bressler, discussing the functionality of the display screen and speaker slot). Moreover, the existence of alternative phone designs from both Samsung and others also indicates that the design of the display and speaker slot are not dictated solely by their respective functions. *See Berry Sterling Corp. v. Pescor Plastics, Inc.*, 122 F.3d 1452, 1456 (Fed. Cir. 1997) ("The presence of alternative designs may or may not assist in determining whether the challenged design can overcome a functionality challenge."). Samsung also argues that a design element is functional if it "affects the cost or quality of the article." (RIB at 74; *see Amini Innovation Corp. v. Anthony California, Inc.*, 439 F.3d 1365, 1371 (Fed. Cir. 2006)). The evidence suggests, though, that the cost and quality of the D'678 Accused Devices are not affected by the claimed design. (*See, e.g.*, Tr. 800:1-19 (testimony of Mr. Bressler discussing cost and quality of alternative designs)). In light of the foregoing, I find that none of the elements of the D'678 patent should be excluded from the infringement analysis because there is no proof that any of the elements are dictated solely by function.

I find Apple's and the Staff's construction overly broad and thus decline to adopt it. I find Samsung has lost sight of the factors important to design patent infringement, namely the

overall visual appearance of the prior art, patents, and accused products, and has instead improperly become mired in the minutia of individual design elements. As such, Samsung's analysis is flawed in light of Egyptian Goddess because it strays too far from the ordinary observer test.

I have again decided not to provide a verbal construction of the claim. I find that the drawings of the D'678 patent speak for themselves and thus construe the claims of the D'678 to cover the design for an electronic device as depicted in FIGS. 1-8 of the D'678 patent. Additionally, I find that the patent does not claim any feature depicted in dashed line, as this has been affirmatively disavowed. (JX-0002 ("The broken lines show portions of the electronic device which form no part of the claimed design.")). I further find that this patent covers a reflective or shiny front face as the drawings depicting the front surface include oblique line shading. *Apple, Inc. v. Samsung Electronics Co., Ltd.*, 678 F.3d 1314, 1331 n. 5 (Fed. Cir. 2012) ("By its use of oblique lines, the D'889 patent indicates that the front surface of the device is reflective and glass-like."); *see also* MPEP § 1503.02(II).

E. Infringement of the D'678 Patent

After the claims have been construed, the court must consider if the patented design is infringed by the accused product. *Arminak & Assocs.*, 501 F.3d at 1320. Design patent infringement is a question of fact, which a patentee must prove by a preponderance of the evidence. *L.A. Gear, Inc. v. Thom McAn Shoe Co.*, 988 F.2d 1117, 1124 (Fed. Cir. 1993). The sole test for determining infringement of a design patent is the "ordinary observer" test. *See e.g.*, *Egyptian Goddess, Inc.*, 543 F.3d at 678. In defining the "ordinary observer test," the Supreme Court stated:

> [I]f, in the eye of an ordinary observer, giving such attention as a purchaser usually gives, two designs are substantially the same, if the resemblance is such as to deceive such an observer, inducing him to purchase one supposing it to be the other, the first one patented is infringed by the other.

Gorham Mfg. Co., 81 U.S. at 528. Thus, the "ultimate question [of whether a design patent is infringed] requires determining whether 'the effect of the whole design [is] substantially the same'." *L.A. Gear, Inc.*, 988 F.2d at 1125 (quoting *Gorham*, 81 U.S. at 530). The test is not a comparison of one product to another, but instead is a comparison of the patented *design* to the allegedly infringing *design*. *See Gorham Mfg. Co.*, 81 U.S. at 529 ("The Gorham *design*, and the two *designs* sold by the defendant, which were patented to White, one in 1867, and the other in 1868, are alike the result of peculiarities of outline, or configuration, and of ornamentation. These make up whatever is distinctive in appearance, and of these, the outline or configuration is most impressive to the eye. Comparing the figure or outline of the plaintiffs' *design* with that of the White *design* of 1867, it is apparent there is no substantial difference." (*emphasis added*)).

In assessing infringement, the patented and accused designs do not have to be identical in order for design patent infringement to be found. *Braun Inc. v. Dynamics Corp. of Am.*, 975 F.2d 815, 820 (Fed. Cir. 1992). "[M]inor differences between a patented design and an accused article's design cannot, and shall not, prevent a finding of infringement." *Payless Shoesource, Inc. v. Reebok Int'l, Ltd.*, 998 F.2d 985, 991 (Fed. Cir. 1993) (quoting *Litton Sys. Inc. v. Whirlpool*, 728 F.2d 1423, 1444 (Fed. Cir. 1984)). What is controlling is the appearance of the patented design as a whole in comparison to the accused design. *OddzOn Prods., Inc.*, 122 F.3d at 1405. To assist in determining whether the two designs would be considered "substantially the same" by an ordinary observer, a comparison of the claimed and accused designs with the prior art may be beneficial. *See Egyptian Goddess, Inc.*, 543 F.3d at 677.

The Parties' Positions

Apple alleges that certain Samsung products infringe the claimed design of the D'678 patent. (CIB at 55-61.) Apple has applied the ordinary observer test to the infringing products in light of the prior art (e.g., Japanese Patent No. D1204221 and Japanese Patent No. D1241638) and has argued that the accused products infringe the claimed D'678 design. (*Id.*) Apple cited the Galaxy S 4G/Vibrant as representative of the D'678 Accused Products. Apple contends the Galaxy S 4G/Vibrant and D'678 designs have the same major visual elements, including a flat front surface comprised of a single piece of transparent material that extends edge-to-edge, a generally rectangular shape with rounded corners, a large display screen with narrow balanced borders on either side and wider balanced borders above and below, and a horizontal lozenge-shaped element horizontally centered in the upper portion of the front face. (*Id.* at 58-59.) Apple argues that with respect to each of the selected pieces of prior art, all of the products accused of infringing the D'678 patent "are more similar to the D'678 design" than to any piece of prior art, particularly with respect to the flat front face comprised of a single piece of transparent material that extends from edge-to-edge across the front face of the device. (*Id.* at 59.) Thus Apple concludes that an ordinary observer would conclude that the overall visual impression of the D'678 Accused Products is substantially the same as the overall visual impression of the design claimed in the D'678 Patent when considered in light of the prior art. (*Id.*) Apple also concludes that any differences between the D'678 Accused Products designs and the D'678 patent would not alter the overall impression of the designs for an ordinary observer. (*Id.*)

In the Staff's view, the Samsung Galaxy S 4G, for example, is "much closer" to the claimed design of the D'678 patent than the patented design is to the prior art. (SIB at 38.)

Although the evidence has shown that the design of the accused device is not exactly the same as the claimed D'678 design, Staff contends the differences between the two designs would not affect the overall impression of an ordinary observer that the designs are *substantially* the same. (*Id.* at 38-39.) In light of the analysis provided by Apple, the Staff believes that the D'678 Accused Products infringe the claimed design of the D'678 patent.

Samsung first references its argument that there is no evidence that an ordinary observer giving such attention as would be given during the decision to purchase would be deceived. (RIB at 76.) Samsung then argues that the scope of the D'678 patent is narrowed by the prior art. (RIB at 76-81.) Specifically, Samsung contends that U.S. Patent No. D534,516 ("D'516") (RX-621), the LG Chocolate device, Japanese design patent JP D1241638 ("JP638") (JX-0099), Korean design registration 30-094921 ("KR'921") (RX-0516 at 8), and U.S. Patent No. D504,889 ("D'889") (RX-2602; JX-0002) narrow the scope of the D'678 patent. (*Id.*) Samsung also alleges that Apple inconsistently applied the ordinary observer standard.

Samsung also argues the differences between the D'678 Accused Devices and the claimed design of the D'678 patent create substantially different visual impressions. (RIB at 82-83.) Samsung contends that the accused products have distinctly wider borders to the sides of the display and thinner borders above and/or below the display screen than the D'678 patent, as well as other details on the front surface, including writing above and/or below the display, circular elements (corresponding to sensors and cameras) near the top of the front face, and soft buttons with graphics near the bottom of the front face. (*Id.* at 82.) Additionally, Samsung contends the accused products also have an oblong shape cut into the front face (corresponding to a receiver element) that is differently shaped and located closer to the top of the front face than

the lozenge feature in the D'678 patent. (*Id.*) Samsung also argues the exterior perimeters of the front surfaces of the accused products also are shaped differently and have different curvature radii of their rounded corners than the D'678 patent. (*Id.*) In addition, Samsung argues most of the accused products have a substantially black front surface, which make them significantly different from the D'678 patent, particularly because the black color used by Samsung makes the interior rectangle, the borders and the oblong shape difficult even to discern. (*Id.*) Finally, Samsung contends the accused products have a different aspect ratio than is shown in the D'678 patent and in some cases the screen is not centered vertically. (*Id.*) Samsung alleges these differences, which are common to all the accused Samsung products, show that the accused products are not substantially the same as the D'678 patent design. (*Id.* at 82-83).

In addition to the general arguments above, Samsung specifically addresses each of the D'678 Accused Devices. (RIB at 83-91.)

Galaxy S II (SGH-T989)

In addition to the differences common to all accused Samsung products as compared with the D'678 patent, Samsung contends the lower edge of the Galaxy S II (SGH-T989) within the bezel is also distinctly rounder than the top edge, such that its exterior edge does not rest flush on a table if held upright perpendicular to the table's surface. (RIB at 83; *see also* RDX-37-43.) In addition, Samsung contends the shape of the receiver feature does not have convex rounded edges; rather they curve upwards more like an elongated bowl shape. (*Id.*) Samsung argues the Galaxy SII product's front surface also includes writing above and below the display, and four elements near the bottom of the front face, including graphical icons to denote touch sensitive areas of the display screen, which the D'678 patent lacks. (*Id.*)

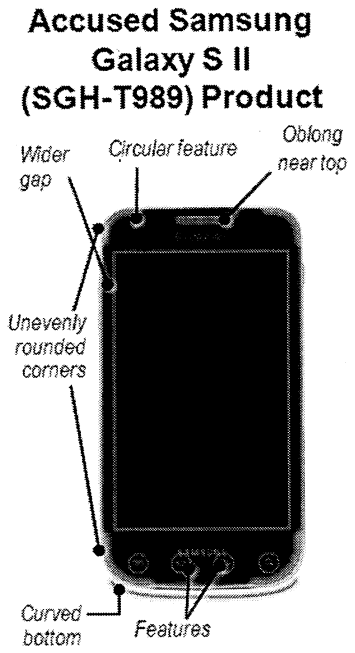

(RX-3631 at 71; RDX-37-43).

Galaxy S 4G/Vibrant

In addition to the differences common to all accused Samsung products as compared with the D'678 patent, Samsung contends the Galaxy S 4G and Vibrant products have a different overall impression due to the curvature radius of the rounded top corners being different than the curvature radius of the bottom corners on the front face, and different from the evenly rounded corners of the D'678 patent. (RIB at 84; *see also* RDX-37-37). The Galaxy S 4G and Vibrant products' front surface also includes writing above and below the display and four elements near the bottom of the front face, including graphical icons to denote touch sensitive areas of the display screen, all of which the D'678 patent lacks. (*Id.*)

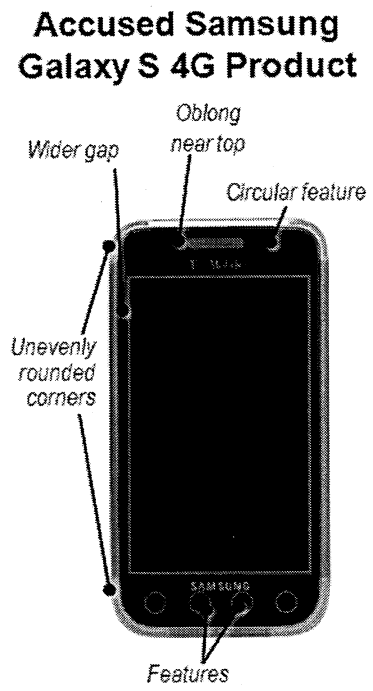

(RX-3631 at 62; RDX-37-37).

Galaxy S II (SGH-1777)

In addition to the differences common to all accused Samsung products as compared with the D'678 patent, Samsung contends the Galaxy S II's (SGH-1777) front surface also includes writing above and below the display, and four elements near the bottom of the front face, including graphical icons to denote touch sensitive areas of the display screen, all of which the D'678 patent lacks. (RIB at 84-85; *see also* RDX-37-40.) The curvature radius of the front surface of the Galaxy S II is also different and sharper than that of the D'678 patent. (*Id.*)

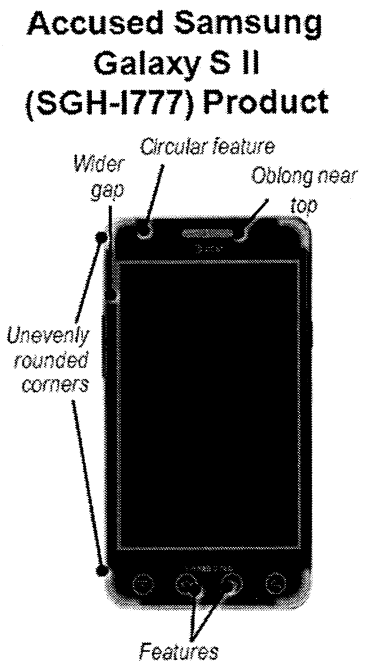

(RX-3631 at 66; RDX-37-40).

Epic Touch

In addition to the differences common to all accused Samsung products as compared with the D'678 patent, Samsung contends the Epic Touch's front surface also includes writing above the display, and four elements near the bottom of the front face, including graphical icons to denote touch sensitive areas of the display screen, which the D'678 patent lacks. (RIB at 85-86; *see also* RDX-37-46.)

Accused Samsung Epic Touch Product

(RX-3631 at 75; RDX-37-46).

Galaxy S II Skyrocket (I727)

In addition to the differences common to all accused Samsung products as compared with the D'678 patent, Samsung contends the Galaxy S II Skyrocket's front surface also includes writing above and below the display and four elements near the bottom of the front face, including graphical icons to denote touch sensitive areas of the display screen, which the D'678 patent lacks. (RIB at 86-87; *see also* RDX-37-49.)

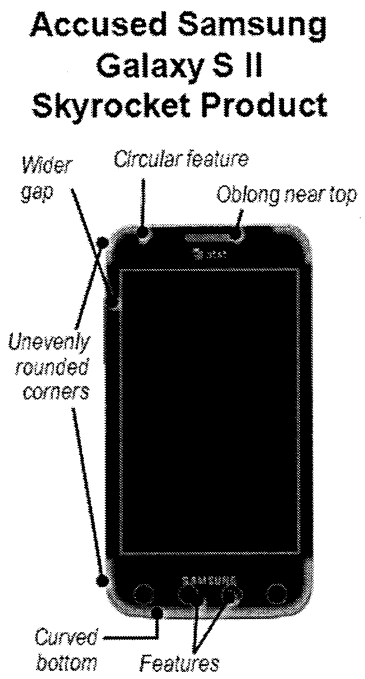

(RX-3631 at 79; RDX-37-49).

Mesmerize, Showcase and Fascinate

In addition to the differences common to all accused Samsung products as compared with the D'678 patent, Samsung contends the Mesmerize, Showcase and Fascinate products' front surfaces also include a two small circular features near the top left corner of the front face, writing above and below the display, and four elements near the bottom of the front face, including graphical icons to denote touch sensitive areas of the display screen – all of which the D'678 patent lacks. (RIB at 87-88; *see also* RDX-37-52.)

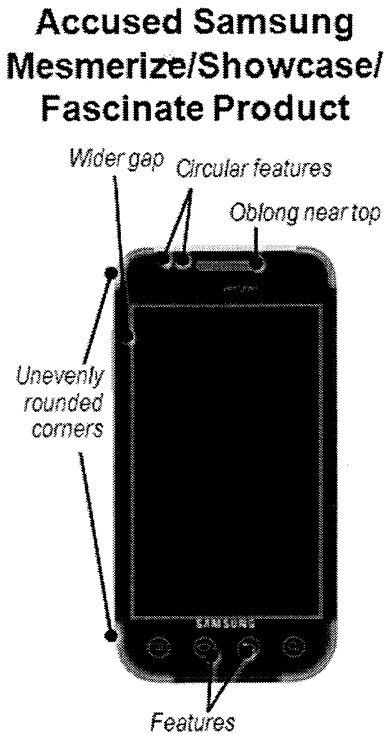

(RX-3631 at 83; RDX-37-52.)

Infuse 4G (SGH-I997)

In addition to the differences common to all accused Samsung products as compared with the D'678 patent, Samsung contends the Infuse 4G's front surface also includes writing above and below the display and four elements near the bottom of the front face, including graphical icons to denote touch sensitive areas of the display screen -- all of which the D'678 patent lacks. (RIB at 88-89; *see also* RDX-37-55.)

Accused Samsung Infuse 4G Product

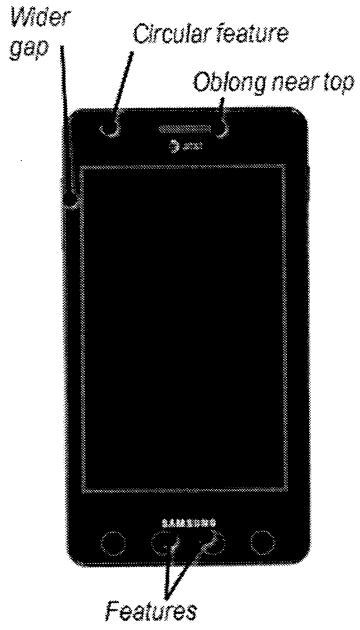

(RX-3631 at 87; RDX-37-55).

Focus S

In addition to the differences common to all accused Samsung products as compared with the D'678 patent, Samsung contends the Focus S product's front surface also includes a circular feature near the top left corner of the front face, writing above and below the display, and three elements near the bottom of the front face, including graphical icons to denote touch sensitive areas of the display screen -- all of which the D'678 patent lacks. (RIB at 89-90; *see also* RDX-37-58.)

Accused Samsung Focus S Product

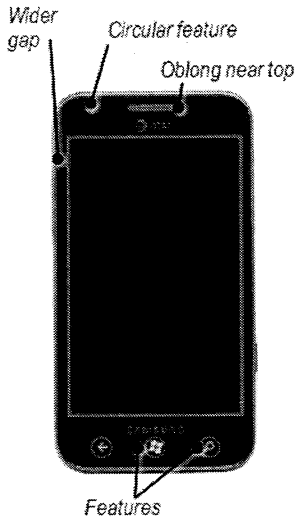

(RX-3631 at 91; RDX-37-58).

Galaxy Player 4.0

In addition to the differences common to all accused Samsung products as compared with the D'678 patent, Samsung contends the Galaxy Player 4.0 product's front surface also includes a circular feature near the top right corner of the front face, writing above the display, and three elements near the bottom of the front face, including graphical icons to denote touch sensitive areas of the display screen — all of which the D'678 patent lacks. (RIB at 90-91; *see also* RDX-37-61.)

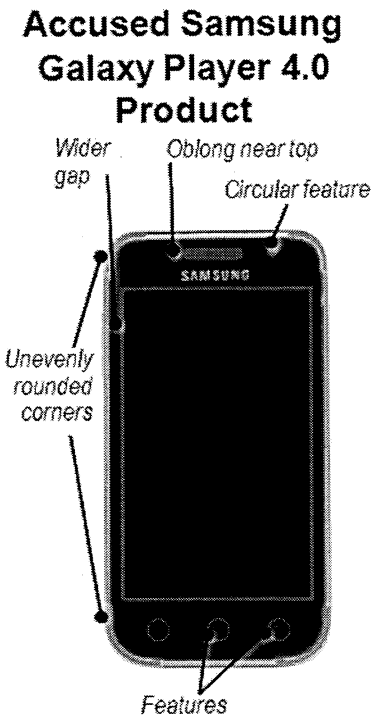

(RX-3631 at 95; RDX-37-61).

Analysis

Samsung's deception argument again is given no weight, as it misapplies the law. (*See Section* I.E.)

Samsung also argues that the scope of the D'678 patent is narrowed by the prior art. (RIB at 76-81.) Specifically, Samsung contends that U.S. Patent No. D534,516 ("D'516") (RX-621), the LG Chocolate device, Japanese design patent JP D1241638 ("JP638") (JX-0099), Korean design registration 30-094921 ("KR'921") (RX-0516 at 8), and U.S. Patent No. D504,889 ("D'889") (RX-2602; JX-0002) narrow the scope of the D'678 patent. (*Id.*) First, there is no evidence on the record that the LG Chocolate (RPX-89) is prior art to the D'678

patent. Furthermore, because Samsung failed to argue that the scope of the D'757 patent was narrowed by the prior art in its prehearing brief, this argument is deemed waived. (Ground Rule 9.2.) Even if not waived, this argument still fails because there is no legal support for considering pieces of prior art for purposes of limiting and defining the scope of the claims. The Federal Circuit described the prior art only as "a frame of reference" for the ordinary observer test, not as an infringement tool:

> [I]t can be difficult to answer the question whether one thing is like another without being given a frame of reference. The context in which the claimed and accused designs are compared, *i.e.*, the background prior art, provides such a frame of reference and is therefore often useful in the process of comparison.

Egyptian Goddess, 543 F.3d at 677. For example, in using the prior art as a frame of reference for the comparison step of the infringement analysis, the Court in *Egyptian Goddess* compared the accused nail buffer design to the patented nail buffer design and considered whether an ordinary observer would find the accused design to be closer to the patented design than to the prior art. *Id.* at 682. Nothing in *Egyptian Goddess* or any other case I could find supports using the prior art to "limit the scope" of an asserted design patent for infringement purposes as Samsung suggests.

Consistent with Apple's broad construction of the patented design, Apple argues that the Galaxy S 4G/Vibrant is representative of the D'678 Accused Products. Likewise, consistent with Samsung's more narrow construction, Samsung divides the D'678 Accused Products into nine groupings. I will analyze infringement according to the groupings set forth by Samsung as I find these groupings better reflect the differences between the accused products. (*See* RPX-149 (Galaxy S 4G), RPX-165 (Vibrant); RPX-156 (Mesmerize), RPX-161 (Showcase), RPX-144 (Fascinate); CPX-0053 (Galaxy Player 4.0); CPX-0057 (Galaxy S II – AT&T); CPX-0058

(Galaxy S II – T-Mobile); CPX-0040 (Epic Touch); CPX-0059 (Galaxy S II Skyrocket); CPX-0083 (Infuse 4G); CPX-0048 (Focus S)). Although the following discussion addresses specific differences between the claimed design of the D'678 patent and the D'678 Accused Products, I note that I considered these details is in the context of the overall impression created by the D'678 Accused Product. The illustrations of the claimed design, prior art, and accused products are included to help elucidate my infringement analysis. The annotations were included by Samsung. Because the test requires a comparison of the accused product with the claimed design, I used the **physical** exhibits in my analysis and accord the annotations no weight unless I have specifically discussed them in my infringement analysis.

1. The Galaxy S II (SGH-T989)

When comparing the D'678 claimed design to the **physical** exhibits of the Galaxy S II (T989) (CPX-0058) in light of the prior art, the overall impression of the D'678 patent is not substantially similar to the overall impression of the Galaxy S II (SGH-T989). The D'678 patent evinces a symmetric and minimalistic design described by Apple in their post hearing brief as reflecting "the 'fundamental idea' of the original iPhone in the form of a flat transparent surface with specific surface geometries . . . Apple created in the iPhone an iconic image of a "dark, oily pond from which a display would magically appear when touched, permitting the user to interact with it." (CIB at 42.) In the front views of the D'678 patent and the Galaxy S II (SGH-T989), however, I note a number of differences that contribute to the dissimilarity between the overall impression of the D'678 patent and the overall impression of the Galaxy S II (SGH-T989). (*See* RDX-37-43.) These differences are exemplified by figures RDX-37-43, RDX-37-44, and RDX-37-45 below. I reiterate that although the following discussion addresses specific differences

between the claimed design of the D'678 patent and the Galaxy S II (SGH-T989), I considered these details is in the context of the overall impression created by the Galaxy S II (SGH-T989).

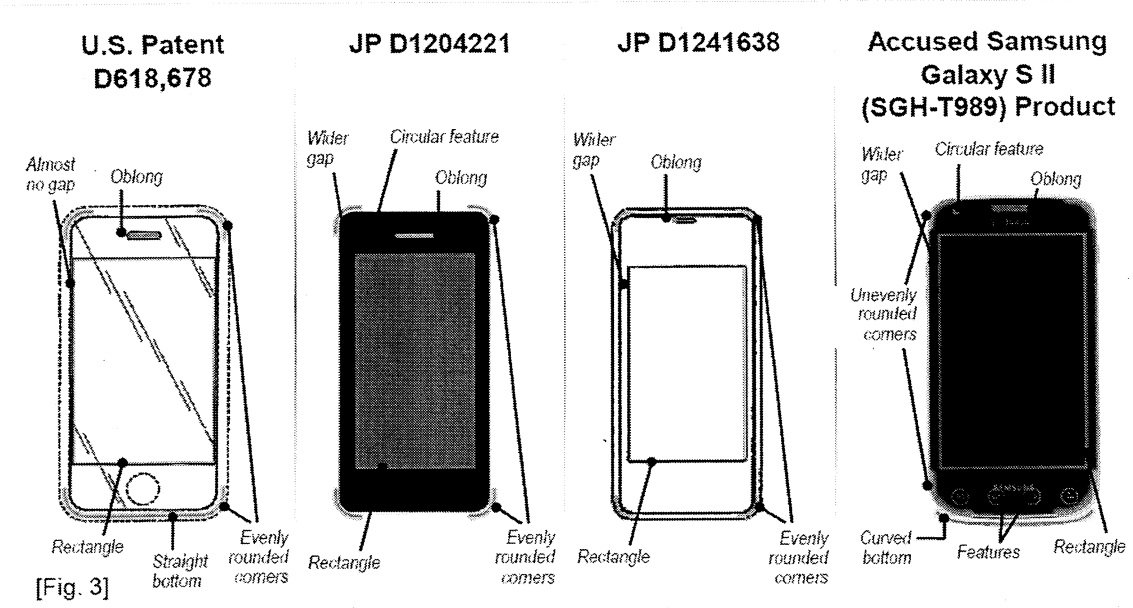

[Fig. 3]

(RDX-37-43)

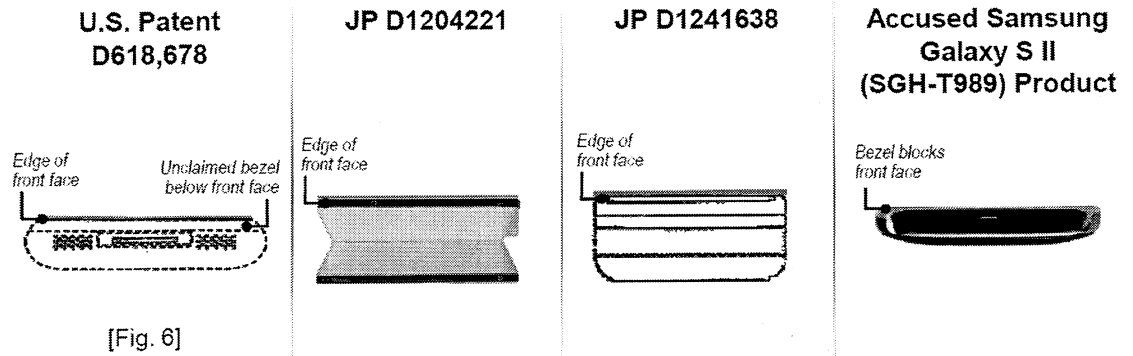

[Fig. 6]

(RDX-37-44)

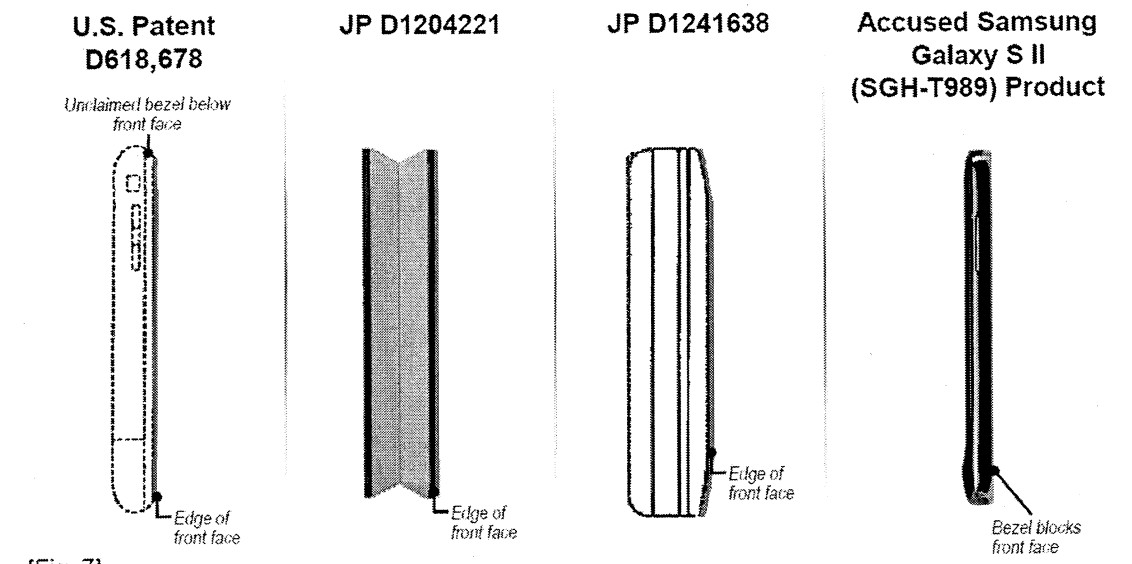

(RDX-37-45)

The top and bottom edges of the claimed and accused designs demonstrate the dissimilarity between the D'678 patent's impression of symmetry and the asymmetric impression of the Galaxy S II (SGH-T989). (*Compare* JX-0002 *with* CPX-0058; *see also* RDX-37-43.) Both the claimed design of the D'678 patent and the Galaxy S II (SGH-T989) design include a single continuous piece of transparent material that is rectangular in overall shape with rounded corners. (*Compare* JX-0002 *with* CPX-0058; *see also* RDX-37-43). The Galaxy S II (SGH-T989), however, has a rounded bottom edge and a different radius of curvature for both the top and bottom edges, creating an asymmetric impression. (CPX-0058.) In contrast, the D'678 patent has four equal, evenly rounded corners, creating a symmetric impression. (*Compare* JX-0002 *with* CPX-0058.)

The positioning of the lozenge-shaped feature on the claimed and accused designs further demonstrates the dissimilarity between the D'678 patent's impression of symmetry and the uneven impression of the Galaxy S II (SGH T989). (*Compare* JX-0002 *with* CPX-0058; *see also*

RDX-37-43.) Both the claimed design of the D'678 patent and the Galaxy S II (SGH-T989) have a lozenge-shaped element horizontally centered in the area above the rectangular element. (*Id.*). The Galaxy S II (SGH-T989), however, has the lozenge-shaped element substantially closer to the top edge of the phone than the rectangular element. (CPX-0058; *see also* RDX-37-43.) In contrast, the claimed design of the D'678 patent has the lozenge-shaped feature is vertically symmetric between the top edge of the face and the rectangular element. Samsung has noted small additional features in the bottom border of the Galaxy S II (SGH-T989) which are somewhat noticeable, but I find that because of their small size and similar coloring, these features tend to blend into the face and thus do not contribute to the difference in impression between the claimed and accused designs.

In addition, the positioning of the rectangular element on the claimed and accused designs demonstrates the dissimilarity between the D'678 patent's impression of symmetry and the uneven impression of the Galaxy S II (SGH T989). (*Compare* JX-0002 *with* CPX-0058; *see also* RDX-37-43.) Both the claimed design of the D'678 patent and the Galaxy S II (SGH-T989) have a rectangular element surrounded by narrow borders on the lateral sides and wider borders above and below. (*Compare* JX-0002 *with* CPX-0058; *see also* RDX-37-43.) The Galaxy S II (SGH-T989), however, has slightly wider lateral borders and top and bottom borders which are uneven in width. (CPX-0058; *see also* RDX-37-43.) In contrast, the claimed design of the D'678 patent has very narrow lateral borders and top and bottom borders which are symmetric.

Accordingly, I find that an ordinary observer would conclude that the overall visual impression of the Galaxy S II (SGH-T989) is not substantially the same as the overall visual

impression of the design claimed in the D'678 patent when considered in light of the prior art and thus does not infringe the D'678 patent.

2. The Galaxy S 4G and Vibrant

When comparing the claimed design of the D'678 patent to the **physical** exhibits of the Galaxy S 4G (CPX-0056) and Vibrant (CPX-0141), in light of the prior art, the overall impression of the Galaxy S 4G and Vibrant is substantially similar to the overall impression of the claimed design of the D'678 patent. These substantially similar impressions are exemplified by figures RDX-37-37, RDX-37-38, and RDX-37-39 below. The D'678 patent evinces a simplistic and minimalistic design described by Apple in their post hearing brief as reflecting "the 'fundamental idea' of the original iPhone in the form of a flat transparent surface with specific surface geometries . . . Apple created in the iPhone an iconic image of a "dark, oily pond from which a display would magically appear when touched, permitting the user to interact with it." (CIB at 42.)

Likewise, the Galaxy S 4G/ Vibrant also give an impression of simplicity and balance. Both the claimed design of the D'678 patent and the Galaxy S 4G/ Vibrant designs include a single continuous piece of transparent material that is rectangular in overall shape with rounded corners. (*Compare* JX-0002 *with* CPX-0056, CPX-0141; *see also* RDX-37-37). In addition, for both the claimed design of the D'678 patent and the Galaxy S 4G/Vibrant, the transparent material is flat and extends edge-to-edge across the entire front surface. (*Id.; see also* RDX-37-38, RDX-37-39.) Also, for both the claimed design of the D'678 patent and the Galaxy S 4G/ Vibrant a rectangular element surrounded by narrow balanced borders on the lateral sides and wider balanced borders above and below is visible in this transparent material. (*Compare* JX-

0002 *with* CPX-0056, CPX-0141; *see also* RDX-37-43.) Finally, for both the claimed design of the D'678 patent and the Galaxy S 4G/Vibrant there is a lozenge-shaped element horizontally centered in the area above the rectangular element. (*Id.*).

I find the minor differences highlighted by Samsung unpersuasive. Samsung argues the curvature radius of the rounded top corners appears different than the curvature radius of the bottom corners on the front face of the Galaxy S 4G/Vibrant, and the curvatures are different from the evenly rounded corners of the D'678 patent. I find these differences are so slight and the impact on the overall impression of the phone so negligible that they would not demonstrate a substantial difference in the overall impression of the Galaxy S4G/Vibrant to an ordinary observer. (*See* CPX-0056, CPX-0141.) Samsung also argues the writing above and below the display and four elements near the bottom of the front face, including graphical icons to denote touch sensitive areas of the display screen, distinguishes the Galaxy S 4G/Vibrant from the D'678 design. I find the icons blend into the background of the display due to their size and coloring and thus do not prevent finding the Galaxy S 4G/Vibrant and the D'678 design substantially similar. (*Id.*) Thus, I do not find that any differences between the Galaxy S 4G/Vibrant and the claimed design of the D'678 patent alter the similarity between the overall impressions of the designs for an ordinary observer.

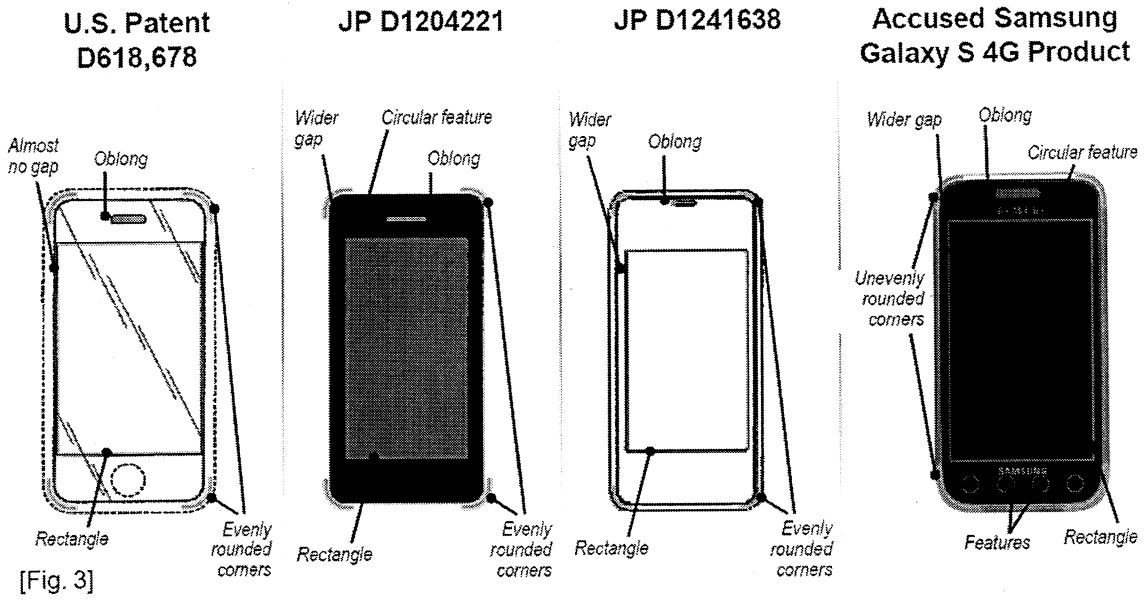

[Fig. 3]

(RDX-37-37)

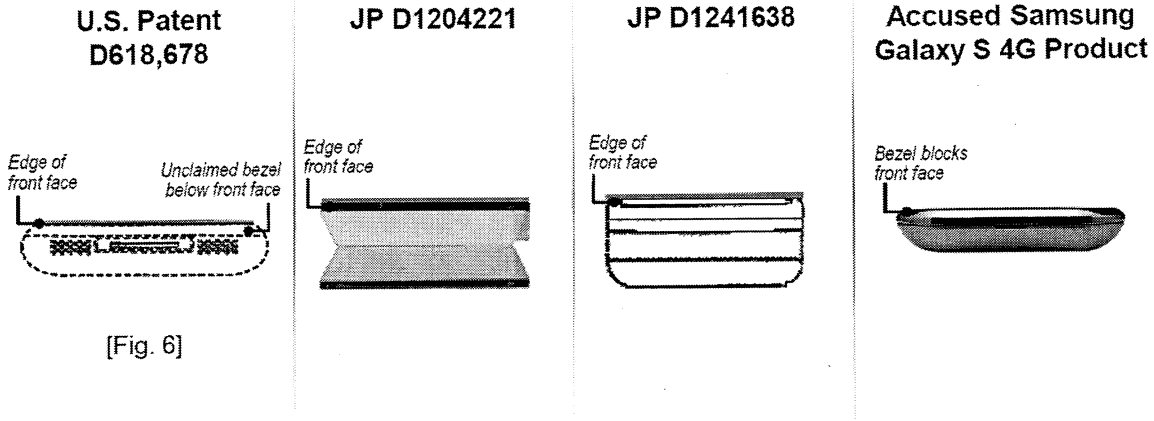

[Fig. 6]

(RDX-37-38)

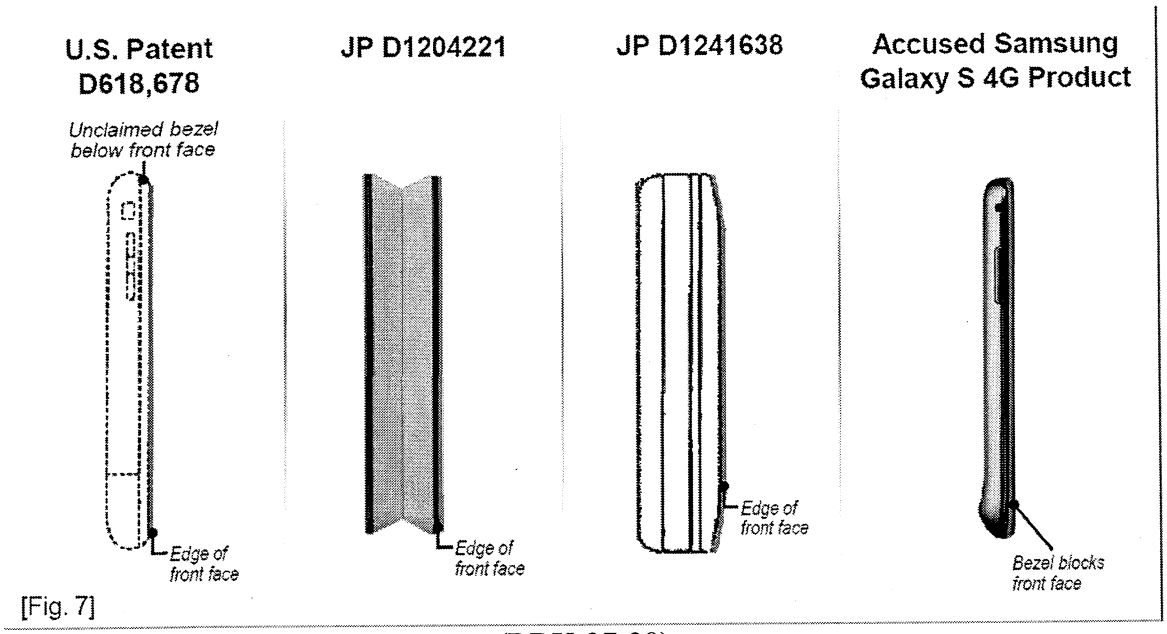

(RDX-37-39)

Accordingly, I find that an ordinary observer would conclude that the overall visual impression of the Galaxy S 4G/ Vibrant are substantially the same as the overall visual impression of the design claimed in the D'678 Patent when considered in light of the prior art and thus infringe the D'678 patent.

3. The Galaxy SII (SGH-I777)

When comparing the D'678 design to the **physical** exhibits of the Galaxy S II (SGH-I777) (CPX-0057), in light of the prior art, the overall impression of the Galaxy S II (SGH-I777) is substantially similar to the overall impression of the claimed design of the D'678 patent. The substantial similarity of the impressions is exemplified by figures RDX-37-40, RDX-37-41, and RDX-37-42 below. The D'678 patent evinces a simplistic and minimalistic design described by Apple in their post hearing brief as reflecting "the 'fundamental idea' of the original iPhone in the form of a flat transparent surface with specific surface geometries . . . Apple created in the

iPhone an iconic image of a "dark, oily pond from which a display would magically appear when touched, permitting the user to interact with it." (CIB at 42.)

Likewise, the Galaxy S II (SGH-I777) also gives an impression of simplicity and balance. Both the claimed design of the D'678 patent and the Galaxy S II (SGH-I777) design include a single continuous piece of transparent material that is rectangular in overall shape with rounded corners. (*Compare* JX-0002 *with* CPX-0057; *see also* RDX-37-40). In addition, for both the claimed design of the D'678 patent and the Galaxy S II (SGH-I777), the transparent material is flat and extends edge-to-edge across the entire front surface. (*Id.; see also* RDX-37-41, RDX-37-42.) Also, for both the claimed design of the D'678 patent and the Galaxy S II (SGH-I777) visible in this transparent material is a rectangular element surrounded by narrow balanced borders on the lateral sides and wider balanced borders above and below. (*Compare* JX-0002 *with* CPX-0057; *see also* RDX-37-40.) Finally, for both the claimed design of the D'678 patent and the Galaxy S II (SGH-I777) there is a lozenge-shaped element horizontally centered in the area above the rectangular element. (*Id.*).

I find the minor differences highlighted by Samsung unpersuasive. Samsung argues the curvature radius of the rounded top corners appears different than the curvature radius of the bottom corners on the front face of the Galaxy S II (SGH-I777), and the curvatures are different from the evenly rounded corners of the D'678 patent. I find these differences are so slight and the impact on the overall impression of the phone so negligible that they would not demonstrate a substantial difference in the overall impression of the Galaxy S II (SGH-I777) to an ordinary observer. (*See* CPX-0057.) Samsung also argues the writing above and below the display and four elements near the bottom of the front face, including graphical icons to denote touch

sensitive areas of the display screen, distinguishes the Galaxy S II (SGH-I777) from the D'678 design. I find the icons blend into the background of the display due to their size and coloring and thus do not prevent finding the Galaxy S II (SGH-I777) and the D'678 design substantially similar. (*Id.*) Thus, I do not find that any differences between the Galaxy S II (SGH-I777) and the claimed design of the D'678 patent alter the similarity between the overall impressions of the designs for an ordinary observer.

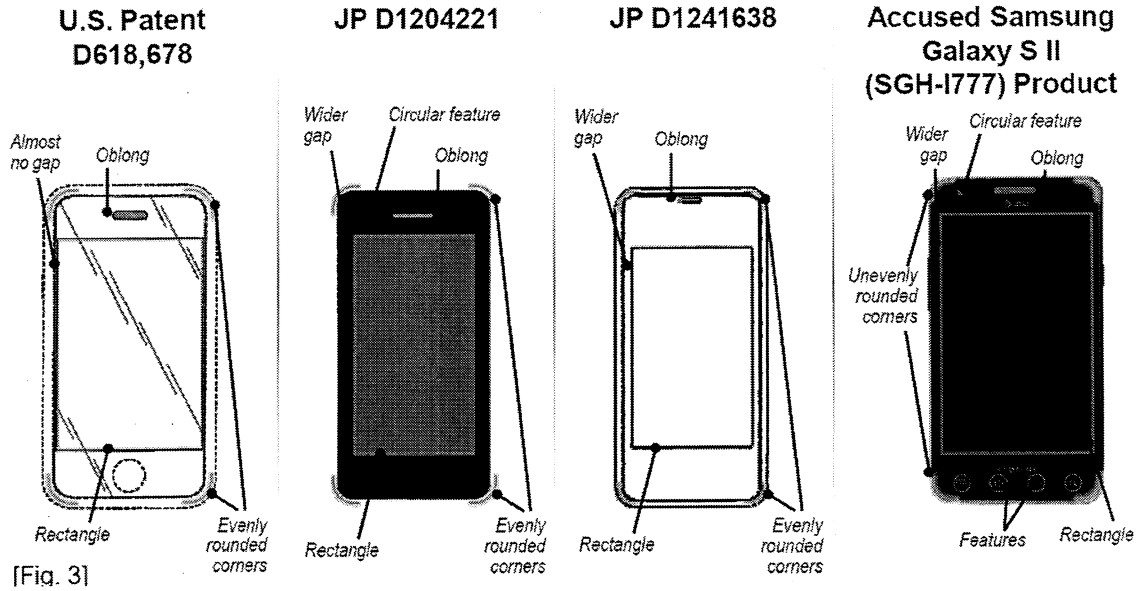

[Fig. 3]

(RDX-37-40)

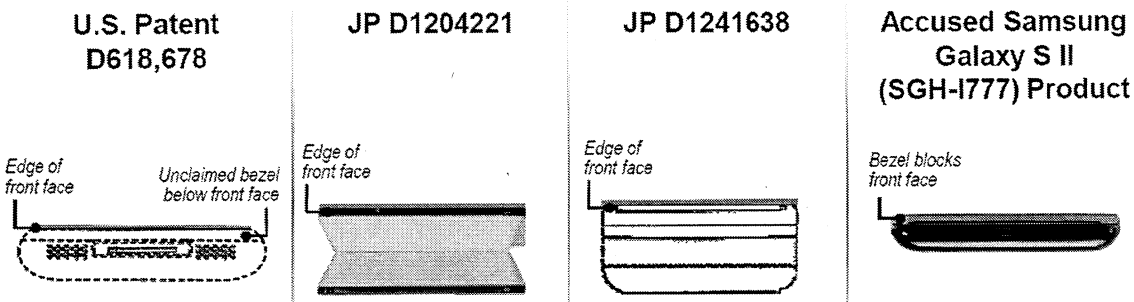

[Fig. 6]

(RDX-37-41)

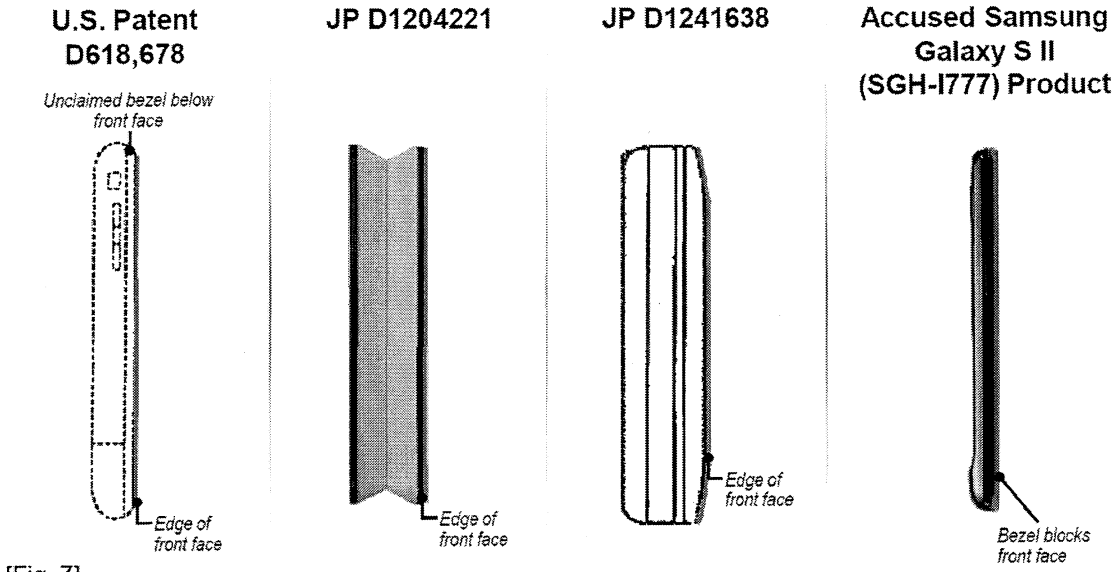

[Fig. 7]

(RDX-37-42)

Accordingly, I find that an ordinary observer would conclude that the overall visual impression of the Galaxy S II (SGH-I777) is substantially similar to the overall visual impression of the design claimed in the D'678 Patent when considered in light of the prior art.

4. The Galaxy SII Epic 4G Touch

When comparing the claimed design of the D'678 patent to the **physical** exhibits of the Galaxy SII Epic 4G Touch (CPX-0040), in light of the prior art, the overall impression of the Galaxy SII Epic 4G Touch is substantially similar to the overall impression of the claimed design of the D'678 patent. The substantial similarity of the impressions is exemplified by figures RDX-37-46, RDX-37-47, and RDX-37-48 below. The D'678 patent evinces a simplistic and minimalistic design described by Apple in their post hearing brief as reflecting "the 'fundamental idea' of the original iPhone in the form of a flat transparent surface with specific surface geometries . . . Apple created in the iPhone an iconic image of a "dark, oily pond from which a display would magically appear when touched, permitting the user to interact with it." (CIB at 42.)

Likewise, the Galaxy SII Epic 4G Touch also gives an impression of simplicity and balance. Both the claimed design of the D'678 patent and the Galaxy SII Epic 4G Touch design include a single continuous piece of transparent material that is rectangular in overall shape with rounded corners. (*Compare* JX-0002 *with* CPX-0040; *see also* RDX-37-46). In addition, for both the claimed design of the D'678 patent and the Galaxy SII Epic 4G Touch, the transparent material is flat and extends edge-to-edge across the entire front surface. (*Id.; see also* RDX-37-47, RDX-37-48.) Also, for both the claimed design of the D'678 patent and the Galaxy SII Epic 4G Touch a rectangular element surrounded by narrow balanced borders on the lateral sides and wider balanced borders above and below is visible in this transparent material. (*Compare* JX-0002 *with* CPX-0040; *see also* RDX-37-46.) Finally, for both the claimed design of the D'678 patent and the Galaxy SII Epic 4G Touch there is a lozenge-shaped element horizontally

centered in the area above the rectangular element. (*Id.*). Based on the effect and placement of all the major design elements, the claimed design of the D'678 patent and the Galaxy SII Epic 4G Touch create the same distinctive overall look which an ordinary observer familiar with the prior art would find substantially similar.

I find the minor differences highlighted by Samsung unpersuasive. Samsung argues the writing above and below the display and four elements near the bottom of the front face, including graphical icons to denote touch sensitive areas of the display screen, distinguishes the Galaxy SII Epic 4G Touch from the D'678 design. I find the icons blend into the background of the display due to their size and coloring and thus do not prevent finding the Galaxy SII Epic 4G Touch and the D'678 design substantially similar. (CPX-0040; *see also* RDX-37-46). Thus, I do not find that any differences between the Galaxy SII Epic 4G Touch and the claimed design of the D'678 patent alter the similarity between the overall impressions of the designs for an ordinary observer.

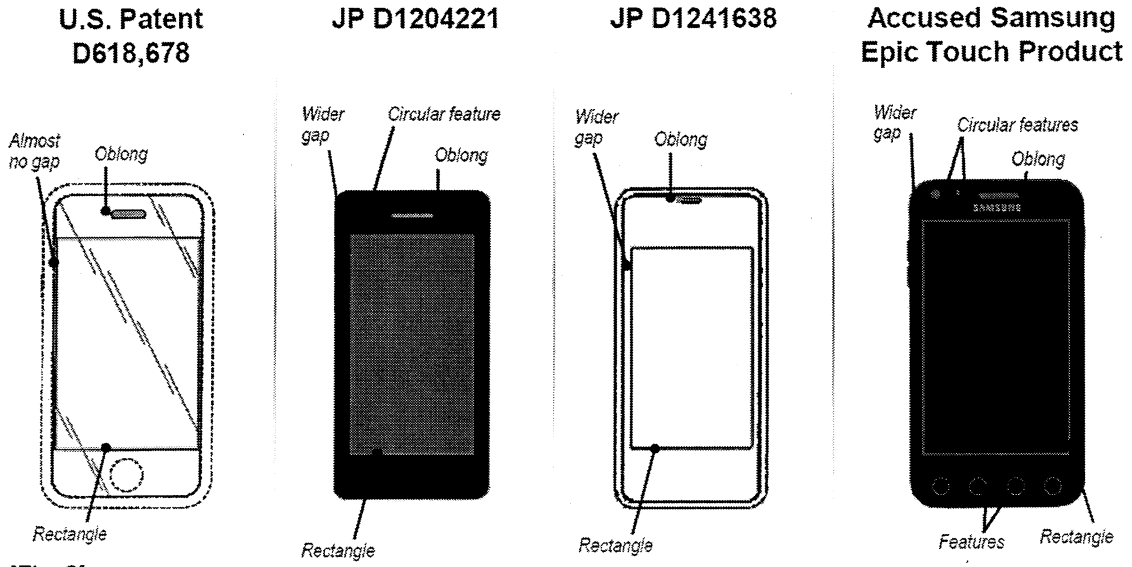

[Fig. 3]

(RDX-37-46)

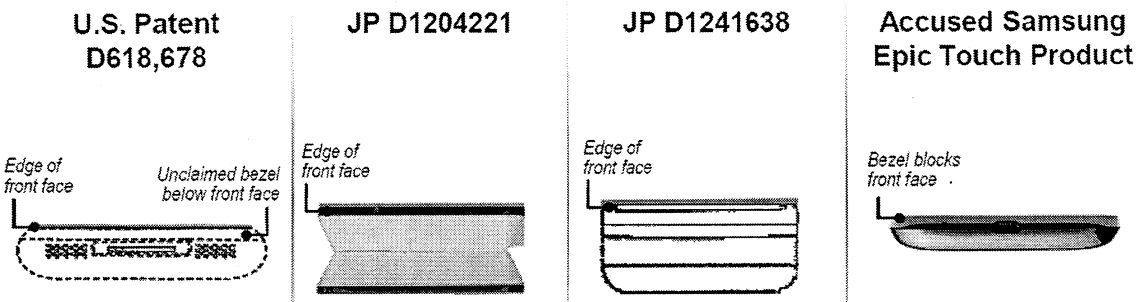

[Fig. 6]

(RDX-37-47)

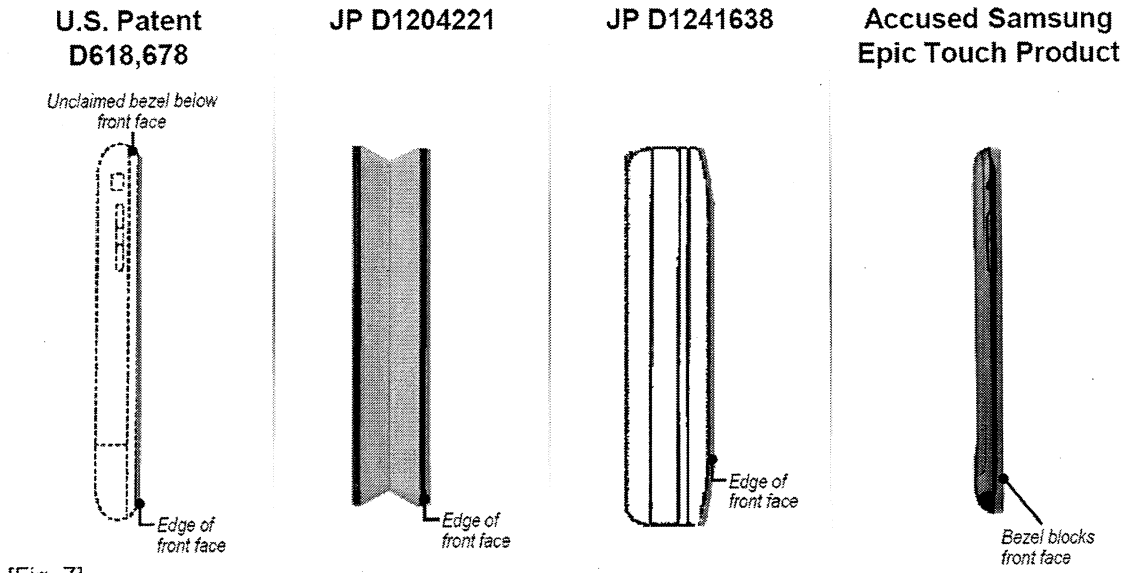

[Fig. 7]

(RDX-37-48)

Accordingly, I find that an ordinary observer would conclude that the overall visual impression of the Galaxy SII Epic 4G Touch is substantially the same as the overall visual impression of the design claimed in the D'678 Patent when considered in light of the prior art.

5. The Galaxy SII Skyrocket

When comparing the claimed design of the D'678 patent to the **physical** exhibits of the Galaxy SII Skyrocket (CPX-0059), in light of the prior art, the overall impression of the Galaxy SII Skyrocket is substantially similar to the overall impression of the claimed design of the D'678 patent. The substantial similarity of the impressions is exemplified by figures RDX-37-49, RDX-37-50, and RDX-37-51 below. The D'678 patent evinces a simplistic and minimalistic design described by Apple in their post hearing brief as reflecting "the 'fundamental idea' of the original iPhone in the form of a flat transparent surface with specific surface geometries . . . Apple created in the iPhone an iconic image of a "dark, oily pond from which a display would magically appear when touched, permitting the user to interact with it." (CIB at 42.)

Likewise, the Galaxy SII Skyrocket also gives an impression of simplicity and balance. Both the claimed design of the D'678 patent and the Galaxy SII Skyrocket design include a single continuous piece of transparent material that is rectangular in overall shape with rounded corners. (*Compare* JX-0002 *with* CPX-0059; *see also* RDX-37-49). In addition, for both the claimed design of the D'678 patent and the Galaxy SII Skyrocket, the transparent material is flat and extends edge-to-edge across the entire front surface. (*Id.; see also* RDX-37-50, RDX-37-51.) Also, for both the claimed design of the D'678 patent and the Galaxy SII Skyrocket a rectangular element surrounded by narrow balanced borders on the lateral sides and wider balanced borders above and below is visible in this transparent material. (*Compare* JX-0002 *with* CPX-0059; *see also* RDX-37-49.) Finally, for both the claimed design of the D'678 patent and the Galaxy SII Skyrocket there is a lozenge-shaped element horizontally centered in the area above the rectangular element. (*Id.*).

I find the minor differences highlighted by Samsung unpersuasive. Samsung argues the curvature radius of the rounded top corners appears different than the curvature radius of the bottom corners on the front face of the Galaxy SII Skyrocket, and the curvatures are different from the evenly rounded corners of the D'678 patent. (*See* CPX-0059.) I find these differences are so slight and the impact on the overall impression of the phone so negligible that they would not demonstrate a substantial difference in the overall impression of the Galaxy SII Skyrocket to an ordinary observer. (*See* CPX-0059.) Samsung also argues the writing above and below the display and four elements near the bottom of the front face, including graphical icons to denote touch sensitive areas of the display screen, distinguishes the Galaxy SII Skyrocket from the D'678 design. I find the icons blend into the background of the display due to their size and coloring and thus do not prevent finding the Galaxy SII Skyrocket and the D'678 design substantially similar. (*Id.*) Thus, I do not find that any differences between the Galaxy SII Skyrocket and the claimed design of the D'678 patent alter the similarity between the overall impressions of the designs for an ordinary observer.

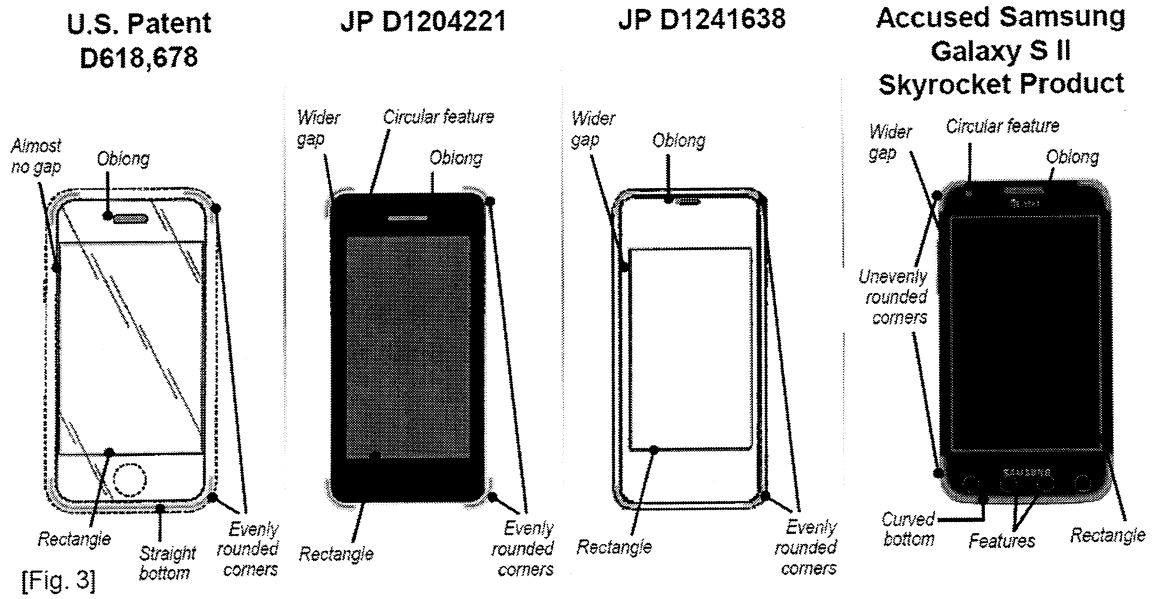

[Fig. 3]

(RDX-37-49)

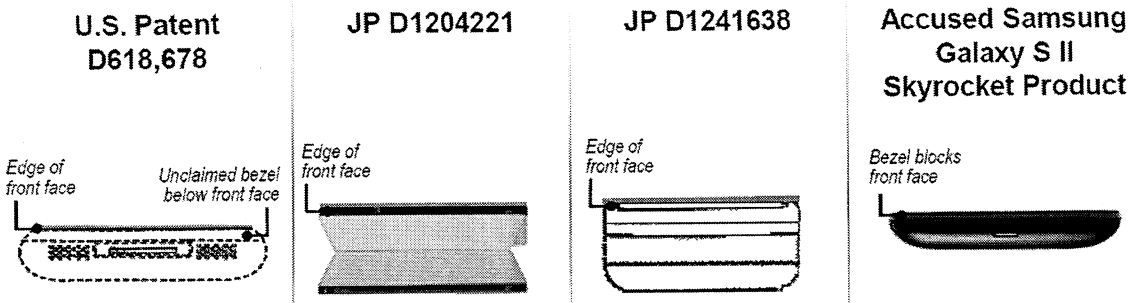

[Fig. 6]

(RDX-37-50)

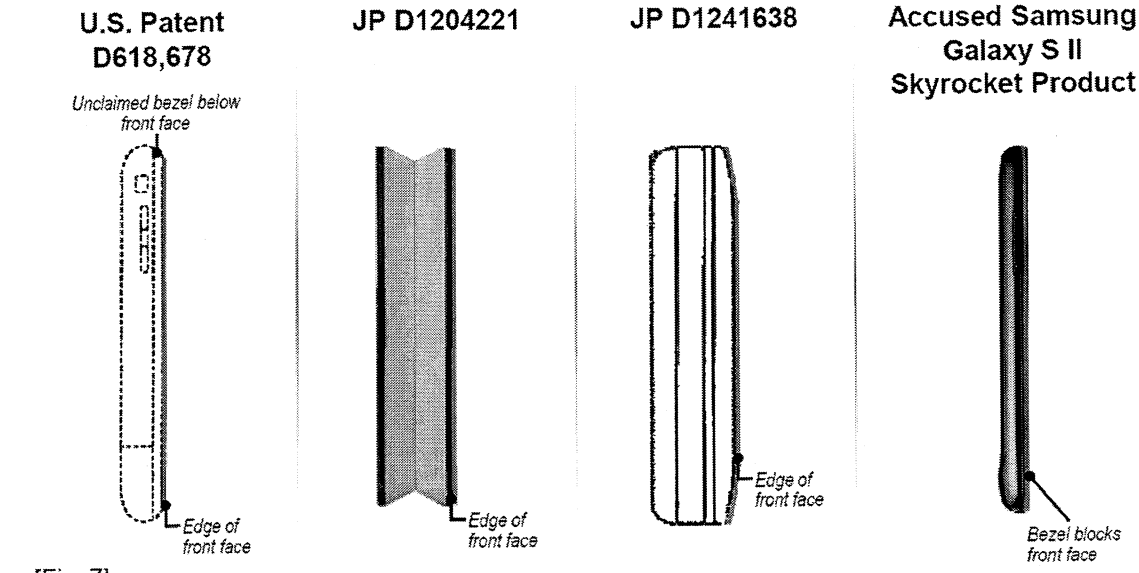

[Fig. 7]

(RDX-37-51)

Accordingly, I find that an ordinary observer would conclude that the overall visual impression of the Galaxy SII Skyrocket is substantially the same as the overall visual impression of the design claimed in the D'678 Patent when considered in light of the prior art.

6. The Mesmerize/Showcase/Fascinate

When comparing the claimed design of the D'678 patent to the **physical** exhibits of the Mesmerize (CPX-0090), Showcase (CPX-0124) and Fascinate (CPX-0044) in light of the prior art, the overall impression of the Mesmerize, Showcase and Fascinate is substantially similar to the overall impression of the claimed design of the D'678 patent. The substantial similarity of the impressions is exemplified by figures RDX-37-52, RDX-37-53, and RDX-37-54 below. The D'678 patent evinces a simplistic and minimalistic design described by Apple in their post hearing brief as reflecting "the 'fundamental idea' of the original iPhone in the form of a flat transparent surface with specific surface geometries . . . Apple created in the iPhone an iconic image of a "dark, oily pond from which a display would magically appear when touched, permitting the user to interact with it." (CIB at 42.)

Likewise, the Mesmerize, Showcase and Fascinate also give an impression of simplicity and balance. Both the claimed design of the D'678 patent and the designs of the Mesmerize/Showcase/Fascinate include a single continuous piece of transparent material that is rectangular in overall shape with rounded corners. (*Compare* JX-0002 *with* CPX-0090, CPX-0124, CPX-0044; *see also* RDX-37-52). In addition, for both the claimed design of the D'678 patent and the Mesmerize/Showcase/Fascinate, the transparent material is flat and extends edge-to-edge across the entire front surface. (*Id.; see also* RDX-37-53, RDX-37-54.) Also, for both the claimed design of the D'678 patent and the Mesmerize/Showcase/ Fascinate, a rectangular element surrounded by narrow balanced borders on the lateral sides and wider balanced borders above and below is visible in this transparent material. (*Compare* JX-0002 *with* CPX-0090, CPX-0124, CPX-0044; *see also* RDX-37-52.) Finally, for both the claimed design of the D'678

patent and the Mesmerize/Showcase/Fascinate there is a lozenge-shaped element horizontally centered in the area above the rectangular element. (*Id.*).

I find the minor differences highlighted by Samsung unpersuasive. Samsung argues the curvature radius of the rounded top corners appears different than the curvature radius of the bottom corners on the front face of the Mesmerize/Showcase/Fascinate, and the curvatures are different from the evenly rounded corners of the D'678 patent. (*See* CPX-0090, CPX-0124, CPX-0044.) I find these differences are so slight and the impact on the overall impression of the phone so negligible that they would not demonstrate a substantial difference in the overall impression of the Mesmerize/Showcase/Fascinate to an ordinary observer. (*Id.*) Samsung also argues the writing above and below the display and four elements near the bottom of the front face, including graphical icons to denote touch sensitive areas of the display screen, distinguishes the Mesmerize/Showcase/Fascinate from the D'678 design. I find the icons blend into the background of the display due to their size and coloring and thus do not prevent finding the Mesmerize/Showcase/Fascinate and the D'678 design substantially similar. (*Id.*) Thus, I do not find that any differences between the Mesmerize/Showcase/Fascinate and the claimed design of the D'678 patent alter the similarity between the overall impressions of the designs for an ordinary observer.

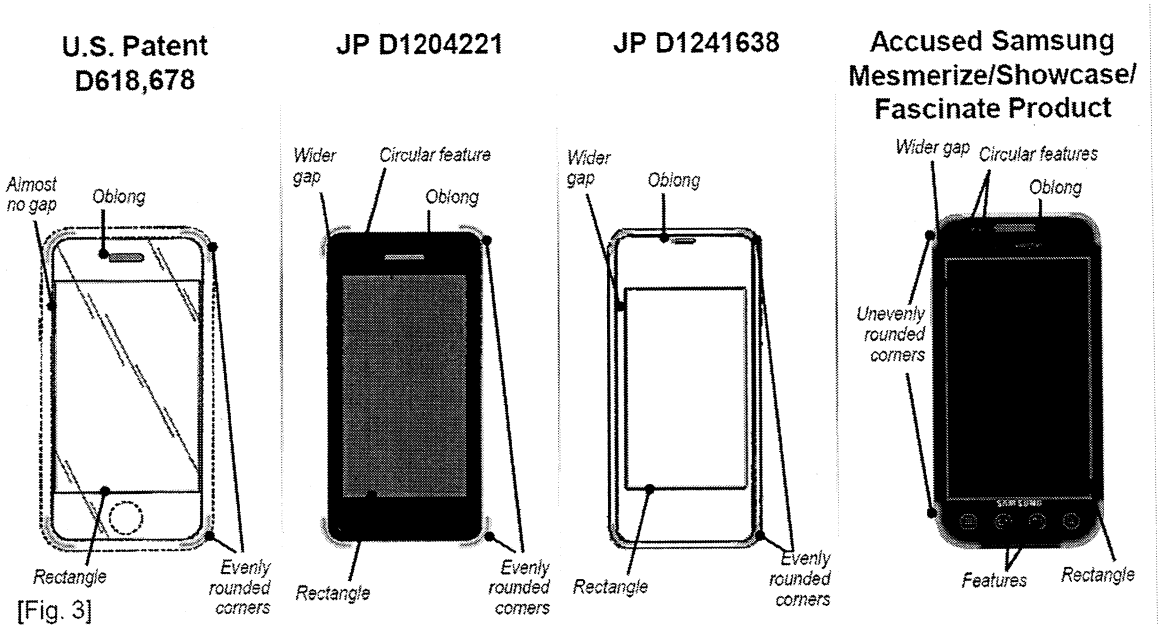

[Fig. 3]

(RDX-37-52)

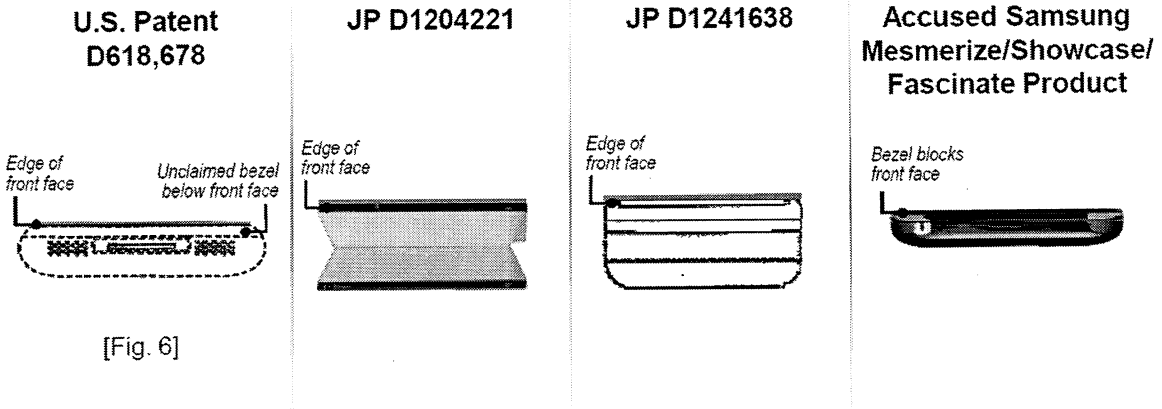

[Fig. 6]

(RDX-37-53)

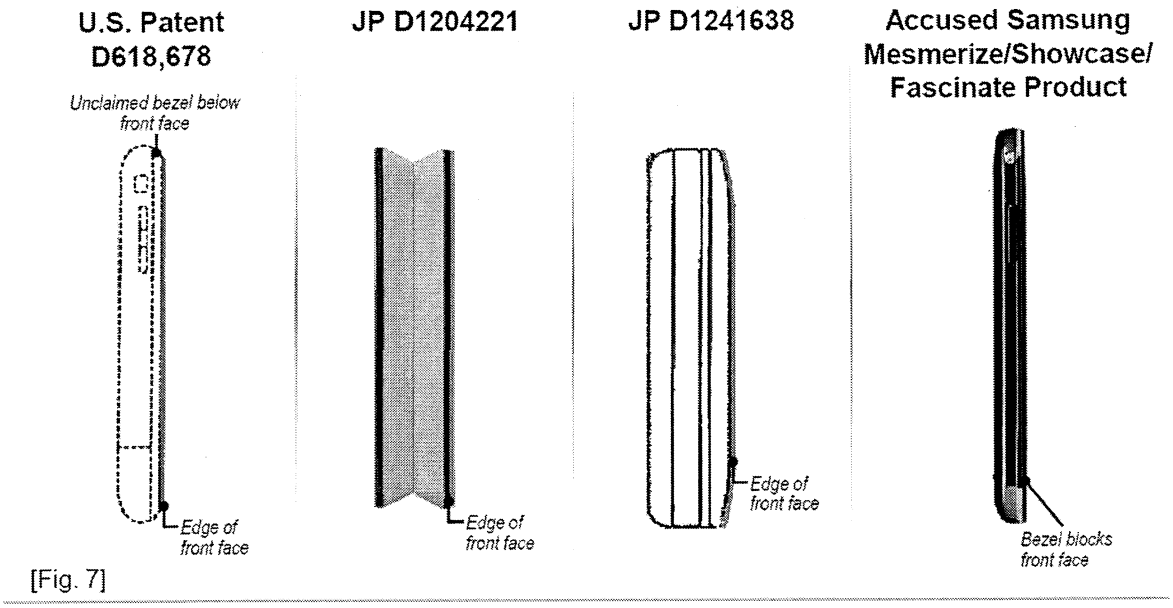

(RDX-37-54)

Accordingly, I find that an ordinary observer would conclude that the overall visual impression of the Mesmerize/Showcase/Fascinate is substantially the same as the overall visual impression of the design claimed in the D'678 patent when considered in light of the prior art.

7. The Infuse 4G

When comparing the claimed design of the D'678 patent to the **physical** exhibits of the Infuse 4G (CPX-0083) in light of the prior art, the overall impression of the Infuse 4G is substantially similar to the claimed design of the D'678 patent. The substantial similarity of the impressions is exemplified by figures RDX-37-55, RDX-37-56, and RDX-37-57 below. The D'678 patent evinces a simplistic and minimalistic design described by Apple in their post hearing brief as reflecting "the 'fundamental idea' of the original iPhone in the form of a flat transparent surface with specific surface geometries . . . Apple created in the iPhone an iconic

image of a "dark, oily pond from which a display would magically appear when touched, permitting the user to interact with it." (CIB at 42.)

Likewise, the Infuse 4G also gives an impression of simplicity and balance. Both the claimed design of the D'678 patent and the Infuse 4G design include a single continuous piece of transparent material that is rectangular in overall shape with rounded corners. (*Compare* JX-0002 *with* CPX-0083; *see also* RDX-37-55). In addition, for both the claimed design of the D'678 patent and the Infuse 4G, the transparent material is flat and extends edge-to-edge across the entire front surface. (*Id.; see also* RDX-37-56, RDX-37-57.) Also, for both the claimed design of the D'678 patent and the Infuse 4G, a rectangular element surrounded by narrow balanced borders on the lateral sides and wider balanced borders above and below is visible in this transparent material. (*Compare* JX-0002 *with* CPX-0083; *see also* RDX-37-55.) Finally, for both the claimed design of the D'678 patent and the Infuse 4G there is a lozenge-shaped element horizontally centered in the area above the rectangular element. (*Id.*).

I find the minor differences highlighted by Samsung unpersuasive. Samsung argues the curvature radius of the rounded top corners appears different than the curvature radius of the bottom corners on the front face of the Infuse 4G, and the curvatures are different from the evenly rounded corners of the D'678 patent. (*See* CPX-0083.) I find these differences are so slight and the impact on the overall impression of the phone so negligible that they would not demonstrate a substantial difference in the overall impression of the Infuse 4G to an ordinary observer. (*Id.*) Samsung also argues the writing above and below the display and four elements near the bottom of the front face, including graphical icons to denote touch sensitive areas of the display screen, distinguishes the Infuse 4G from the D'678 design. I find the icons blend into the

background of the display due to their size and coloring and thus do not prevent finding the Infuse 4G and the D'678 design substantially similar. (*Id.*) Thus, I do not find that any differences between the Infuse 4G and the claimed design of the D'678 patent alter the similarity between the overall impressions of the designs for an ordinary observer.

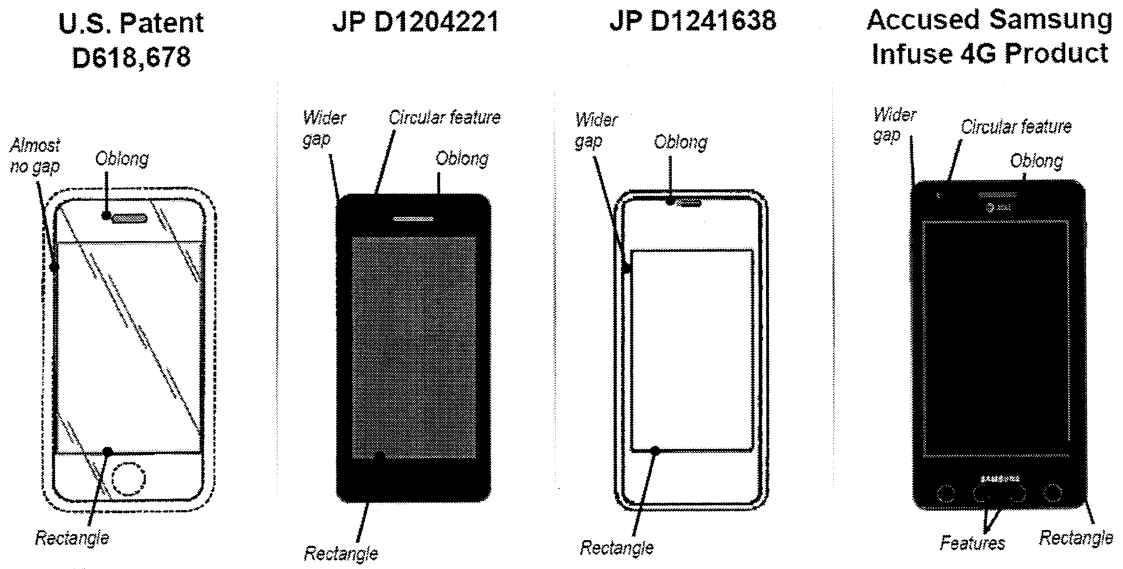

[Fig. 3]

(RDX-37-55)

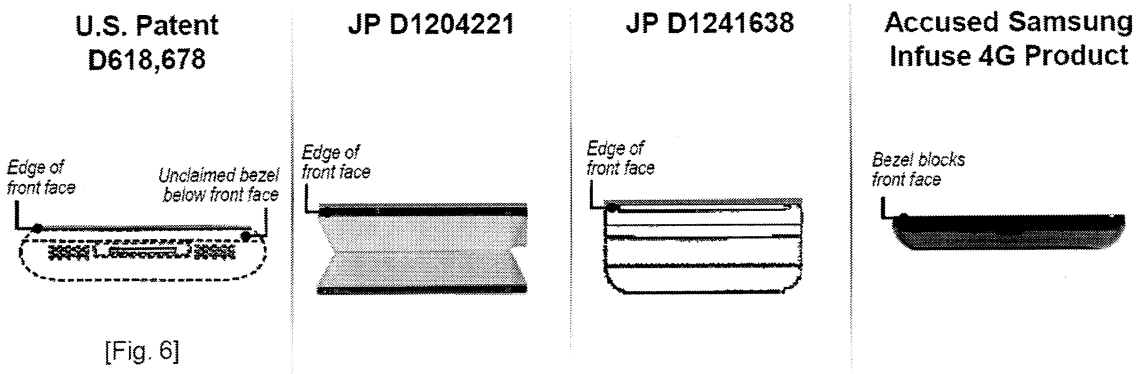

[Fig. 6]

(RDX-37-56)

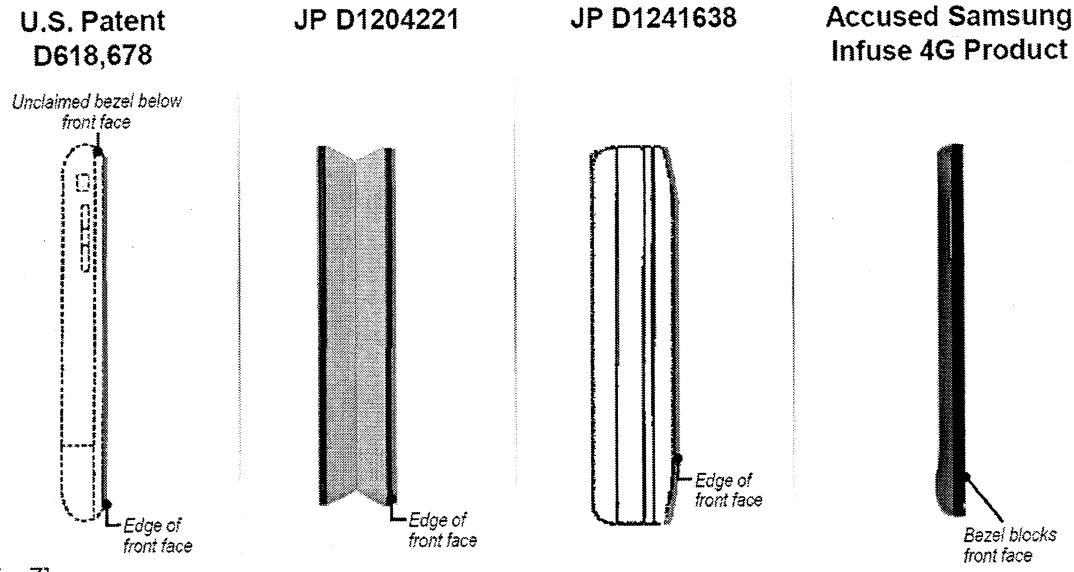

[Fig. 7]

(RDX-37-57)

Accordingly, I find that an ordinary observer would conclude that the overall visual impression of the Infuse 4G is substantially the same as the overall visual impression of the design claimed in the D'678 Patent when considered in light of the prior art.

8. The Focus S

When comparing the claimed design of the D'678 patent to the **physical** exhibits of the Focus S (CPX-0048) in light of the prior art, the overall impression of the Focus S is substantially similar to the claimed design of the D'678 patent. The substantial similarity of the impressions is exemplified by figures RDX-37-58, RDX-37-59, and RDX-37-60 below. The D'678 patent evinces a simplistic and minimalistic design described by Apple in their post hearing brief as reflecting "the 'fundamental idea' of the original iPhone in the form of a flat transparent surface with specific surface geometries . . . Apple created in the iPhone an iconic image of a "dark, oily pond from which a display would magically appear when touched, permitting the user to interact with it." (CIB at 42.)

Likewise, the Focus S also gives an impression of simplicity and balance. Both the claimed design of the D'678 patent and the Focus S design include a single continuous piece of transparent material that is rectangular in overall shape with rounded corners. (*Compare* JX-0002 *with* CPX-0048; *see also* RDX-37-58). In addition, for both the claimed design of the D'678 patent and the Focus S, the transparent material is flat and extends edge-to-edge across the entire front surface. (*Id.; see also* RDX-37-59, RDX-37-60.) Also, for both the claimed design of the D'678 patent and the Focus S, a rectangular element surrounded by narrow balanced borders on the lateral sides and wider balanced borders above and below is visible in this transparent material. (*Compare* JX-0002 *with* CPX-0048; *see also* RDX-37-58.) Finally, for both the claimed design of the D'678 patent and the Focus S there is a lozenge-shaped element horizontally centered in the area above the rectangular element. (*Id.*). Based on the effect and placement of all the major design elements, the claimed design of the D'678 patent and Focus S create the same distinctive overall look which an ordinary observer familiar with the prior art would find substantially similar.

I find the minor differences highlighted by Samsung unpersuasive. Samsung argues the curvature radius of the rounded top corners appears different than the curvature radius of the bottom corners on the front face of the Focus S, and the curvatures are different from the evenly rounded corners of the D'678 patent. (*See* CPX-0048.) I find these differences are so slight and the impact on the overall impression of the phone so negligible that they would not demonstrate a substantial difference in the overall impression of the Focus S to an ordinary observer. (*Id.*) Samsung also argues the writing above and below the display and four elements near the bottom of the front face, including graphical icons to denote touch sensitive areas of the display screen,

distinguishes the Focus S from the D'678 design. I find the icons blend into the background of the display due to their size and coloring and thus do not prevent finding the Focus S and the D'678 design substantially similar. (*Id.*) Thus, I do not find that any differences between the Focus S and the claimed design of the D'678 patent alter the similarity between the overall impressions of the designs for an ordinary observer.

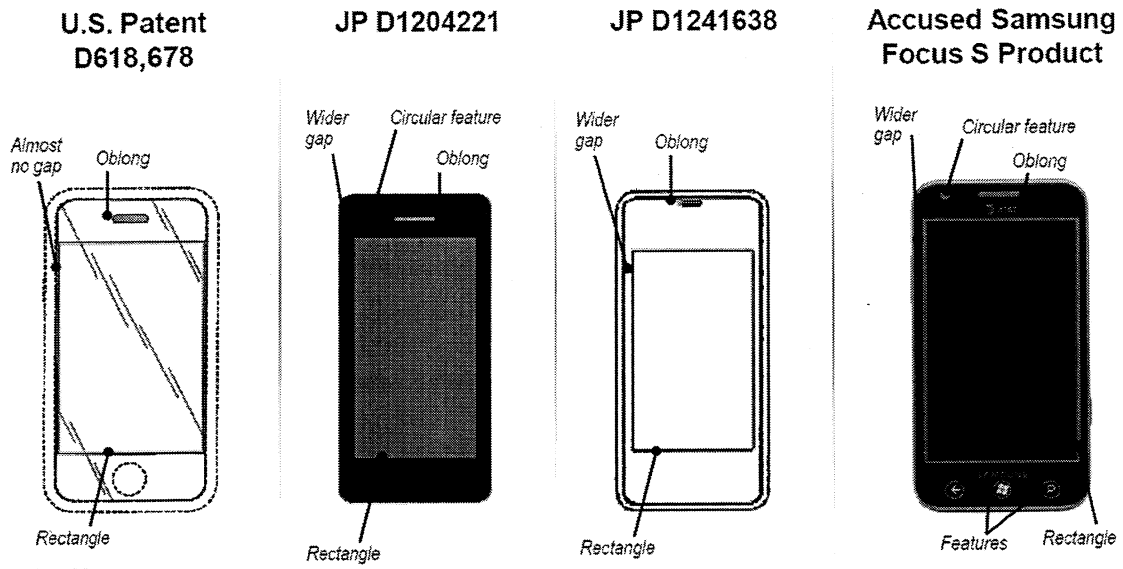

[Fig. 3]

(RDX-37-58)

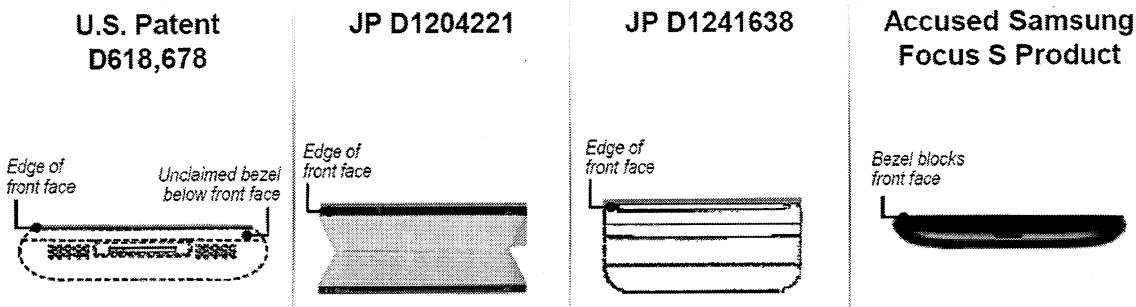

[Fig. 6]

(RDX-37-59)

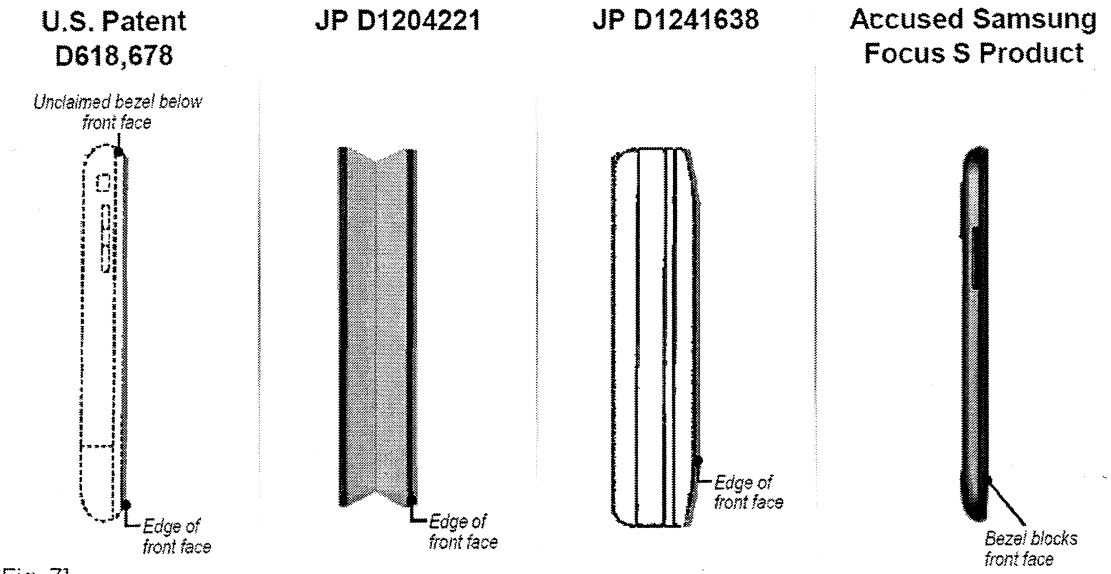

[Fig. 7]

(RDX-37-60)

Accordingly, I find that an ordinary observer would conclude that the overall visual impression of the Focus S is substantially the same as the overall visual impression of the design claimed in the D'678 patent when considered in light of the prior art.

9. The Galaxy Player 4.0

When comparing the claimed design of the D'678 patent to the **physical** exhibits of the Galaxy Player 4.0 (CPX-0053) in light of the prior art, the overall impression of the Galaxy Player 4.0 is substantially similar to the overall impression of the claimed design of the D'678 patent. The substantial similarity of the impressions is exemplified by figures RDX-37-61, RDX-37-62, and RDX-37-63 below. The D'678 patent evinces a simplistic and minimalistic design described by Apple in their post hearing brief as reflecting "the 'fundamental idea' of the original iPhone in the form of a flat transparent surface with specific surface geometries . . . Apple created in the iPhone an iconic image of a "dark, oily pond from which a display would magically appear when touched, permitting the user to interact with it." (CIB at 42.)

Likewise, the Galaxy Player 4.0 also gives an impression of simplicity and balance. Both the claimed design of the D'678 patent and the Galaxy Player 4.0 design include a single continuous piece of transparent material that is rectangular in overall shape with rounded corners. (*Compare* JX-0002 *with* CPX-0053; *see also* RDX-37-61). In addition, for both the claimed design of the D'678 patent and the Galaxy Player 4.0, the transparent material is flat and extends edge-to-edge across the entire front surface. (*Id.; see also* RDX-37-62, RDX-37-63.) Also, for both the claimed design of the D'678 patent and the Galaxy Player 4.0, a rectangular element surrounded by narrow balanced borders on the lateral sides and wider balanced borders above and below is visible in this transparent material. (*Compare* JX-0002 *with* CPX-0053; *see also* RDX-37-61.) Finally, for both the claimed design of the D'678 patent and the Galaxy Player 4.0 there is a lozenge-shaped element horizontally centered in the area above the rectangular element. (*Id.*).

I find the minor differences highlighted by Samsung unpersuasive. Samsung argues the curvature radius of the rounded top corners appears different than the curvature radius of the bottom corners on the front face of the Galaxy Player 4.0, and the curvatures are different from the evenly rounded corners of the D'678 patent. (*See* CPX-0053.) I find these differences are so slight and the impact on the overall impression of the phone so negligible that they would not demonstrate a substantial difference in the overall impression of the Galaxy Player 4.0 to an ordinary observer. (*Id.*) Samsung also argues the writing above and below the display and four elements near the bottom of the front face, including graphical icons to denote touch sensitive areas of the display screen, distinguishes the Galaxy Player 4.0 from the D'678 design. I find the icons blend into the background of the display due to their size and coloring and thus do not

prevent finding the Galaxy Player 4.0 and the D'678 design substantially similar. (*Id.*) Thus, I do not find that any differences between the Galaxy Player 4.0 and the claimed design of the D'678 patent alter the similarity between the overall impressions of the designs for an ordinary observer.

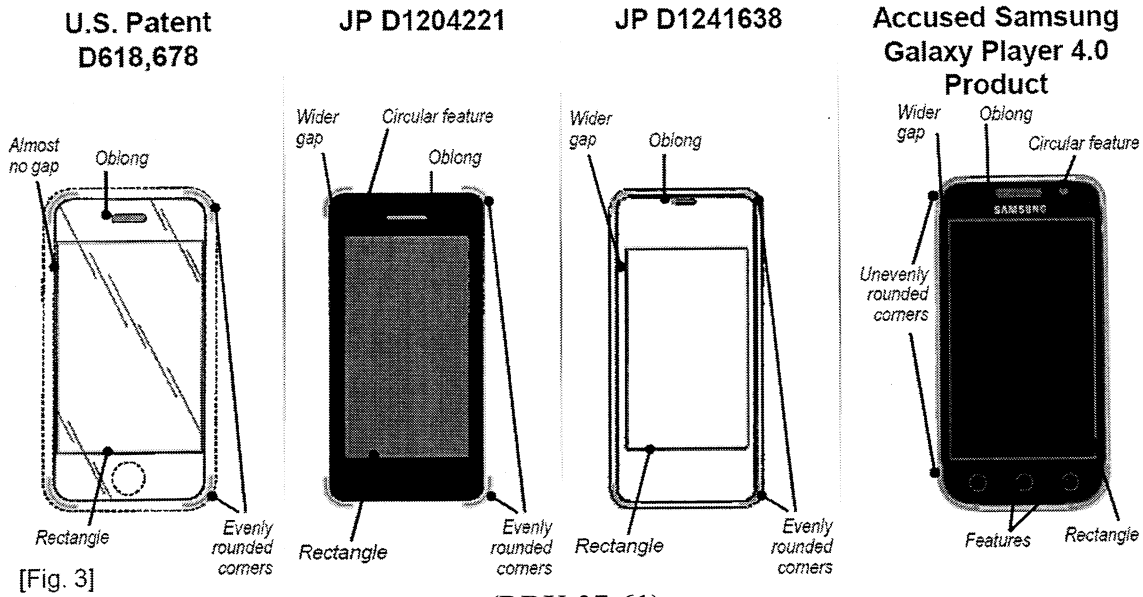

[Fig. 3]

(RDX-37-61)

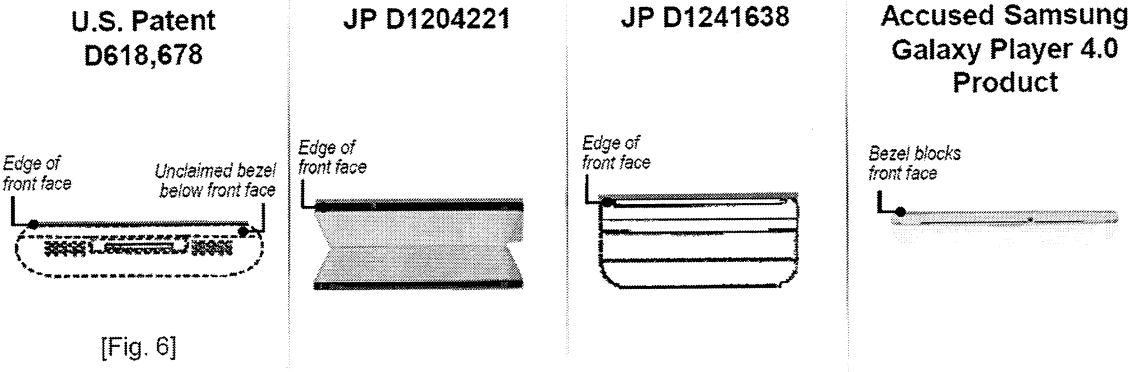

[Fig. 6]

(RDX-37-62)

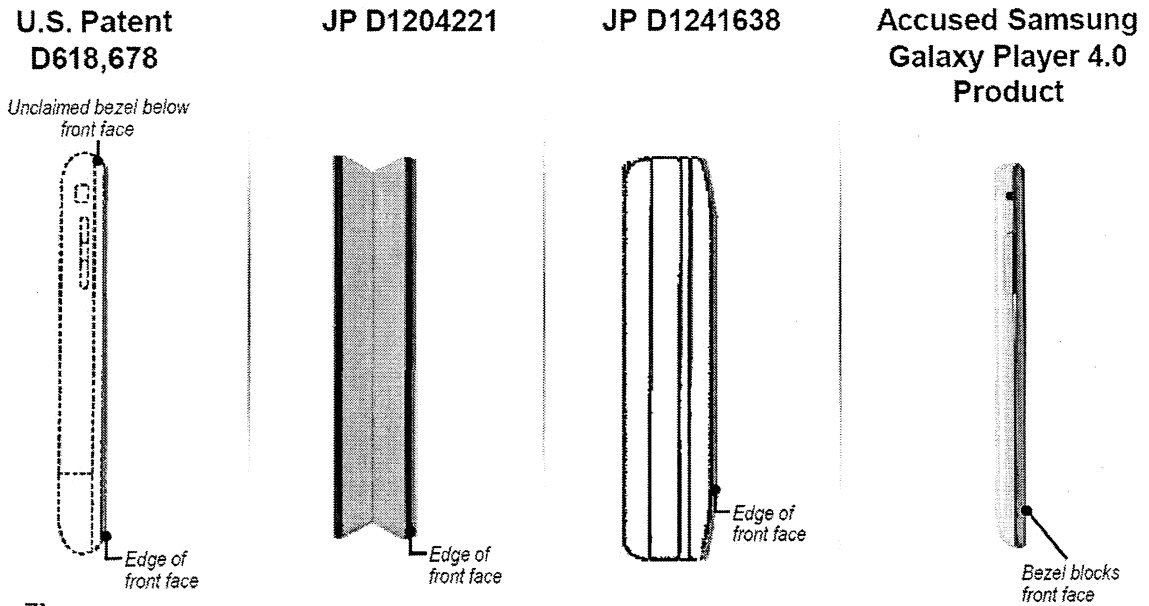

[Fig. 7]

(RDX-37-63)

Accordingly, I find that an ordinary observer would conclude that the overall visual impression of the Galaxy Player 4.0 is substantially the same as the overall visual impression of the design claimed in the D'678 Patent when considered in light of each piece of prior art.

F. Validity of the D'678 Patent

1. Obviousness under 35 U.S.C. § 103

c. Japanese Design Patent JP D1241638

Samsung argues the JP638 shares the same overall configuration as the D'678 design except for the arched nature of the front face. (RIB at 103.) Samsung argues that if the D'678 patent is construed broadly, JP638 renders it obvious through minor variations or in combination with other prior art references. (*Id.*) Samsung argues that several prior art references taught the D'678 patents placement of an oblong shape that was vertically/horizontally centered in the upper border to enhance mobile phone use and functionality. (*Id.*) Samsung asserts that other electronic device designs created before Apple filed its application for the D'678 patent had this

variation and that this evinces that the design was obvious to designers. (*Id.*) Samsung argues that the D'678 patent's modification of the placement and size of that oblong shape was therefore an obvious change based on other prior art. (*Id.* at 104.)

Analysis

Samsung supports its obviousness contention with only attorney argument. (*See id.* at 103-104.) Samsung presents no supporting testimony. I find Samsung's argument without merit.

Samsung admits that "the arched nature of the front face" of the JP638 differs from the front face of the D'678 design, yet provides no explanation of how the JP638 either through "minor variations or in combination with other prior art references" renders the claimed design obvious. (*See id.*) The only argument that Samsung presents is an argument as to why it would have been obvious to vertically/horizontally center the oblong shape in the JP638. Samsung presents no argument discussing the convex front face of the JP836.

The ultimate inquiry into whether the claimed design of the D'678 patent would have been obvious is determined from the perspective of a designer of ordinary skill who designs articles of the type involved. *See Titan Tire Corp. v. Case New Holland, Inc.*, 566 F.3d 1372, 1375 (Fed. Cir. 2009) ("the ultimate inquiry ... is whether the claimed design would have been obvious to a designer of ordinary skill who designs articles of the type involved") (quoting *Durling v. Spectrum Furniture Co.*, 101 F.3d 100, 103 (Fed. Cir. 1996).) Samsung presents no testimony of a designer of ordinary skill and thus I find Samsung has failed to set forth a *prima facia* case of obviousness.

Even if Samsung's obviousness argument was properly supported, Samsung's obviousness argument still fails as I find the differences between the JP836 design and the claimed design are so pronounced that the JP836 cannot constitute a primary reference.

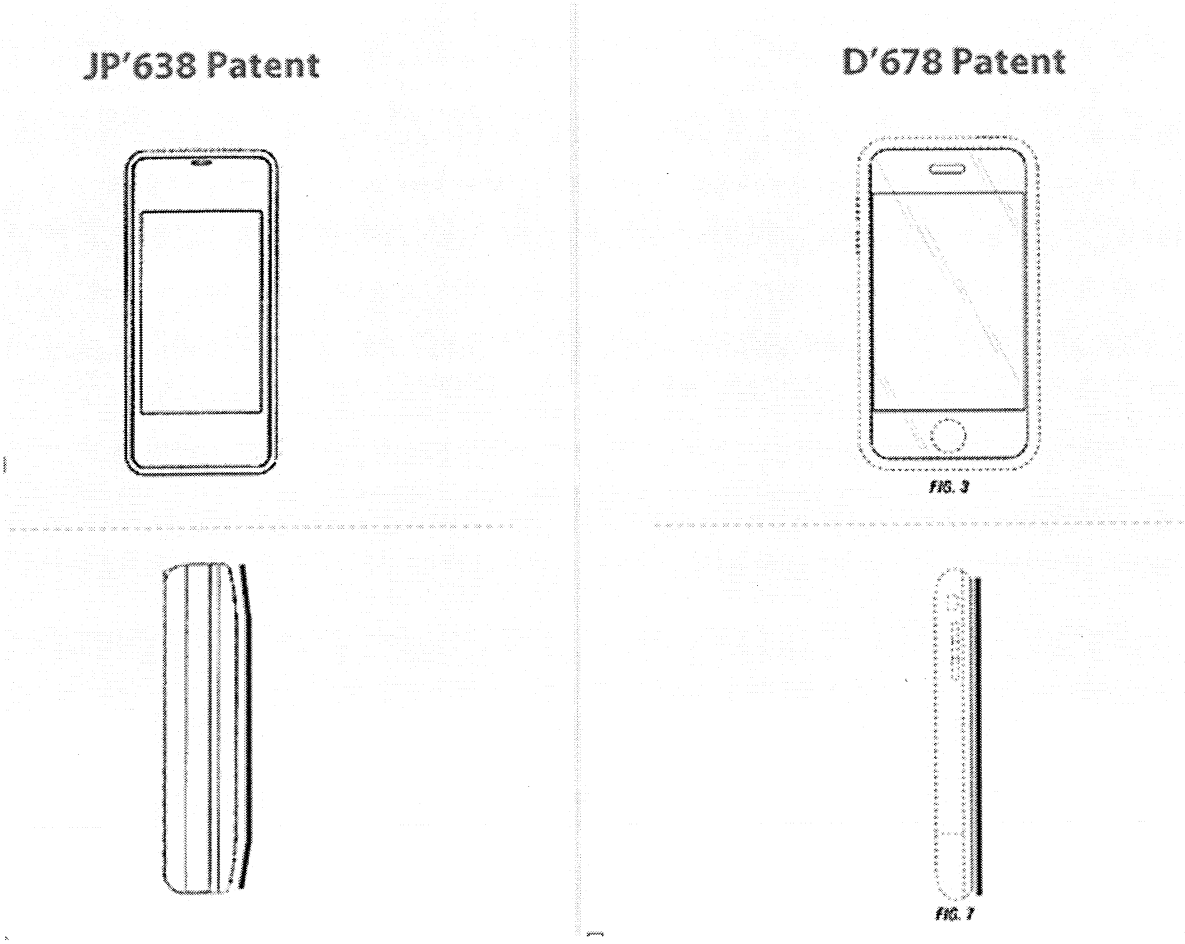

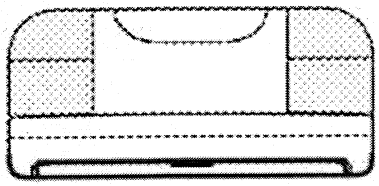

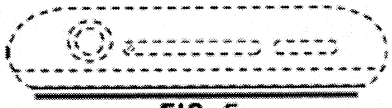

FIG. 5

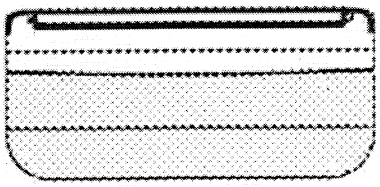

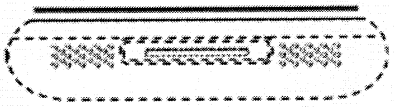

FIG. 6

In particular, as can be seen in the illustrations above, the front face of the D678 design appears perfectly flat, whereas the front face of the JP638 design is arched at the top and bottom areas outside of the interior rectangle feature. Thus, whereas the D'678 has a front face that is straight, the front face of the JP638 is convex. *Apple, Inc. v. Samsung Electronics Co., Ltd.*, 678 F.3d 1314, 1326 (Fed. Cir. 2012) ("When the claimed portion of the side view is taken into account, the differences between the arched, convex front of the '638 reference distinguish it from the perfectly flat front face of the D'087 patent.") Also, the oblong shape on the JP638 is significantly skewed towards the top of the design in contrast to the D'678 design in which the oblong feature is centered both horizontally and vertically in the area above the interior rectangle feature.

Moreover, the design claimed in the D'678 patent has a transparent/reflective surface that extends over the entire front face of the device as shown by the oblique line shading. The JP638, on the other hand, does not include such lines, which suggests that the surface is not transparent

or reflective. Although it might be argued that the interior rectangle on the front face of the JP638 design must inherently be transparent or reflective because it is a display used for viewing, such an argument cannot apply to the area outside the interior rectangle. That is, there is nothing in the design of the JP638 that would dictate that the surfaces outside the interior rectangle have to be transparent or reflective. Thus, the transparent/reflective front surface of the D'678 design further adds to the dissimilarity between the JP63 design and the design claimed in the D'678 patent.

Accordingly, for the reasons above, I do not find that the JP638 qualifies as a primary reference and thus I find for this additional reason that Samsung has failed to set forth a *prima facia* case of obviousness. *Apple, Inc.*, 678 F.3d at 1332.

d. LG Chocolate in combination with Korean Patent KR-30-0394921

Samsung argues that the LG chocolate phone disclosed an electronic device of a generally rectangular shape with rounded corners and a transparent front face above and inset display. (RIB at 104.) Samsung argues that the front face of the LG chocolate also has an oblong shape above interior rectangles. (*Id.*) Samsung argues that although the proportions of the display and the oblong shapes compared to the whole body art different than those found on the D'678 patent, those differences would have been obvious to someone skilled in the art. (*Id.*) Samsung argues it would have been obvious to make such a modification to allow for a larger display screen as larger LCD displays became technologically available and the functionality of mobile devices expanded. (*Id.*) Samsung argues that Korean Patent KR-30-0394921 ("K921") discloses an overall rectangular shape with rounded corners, a transparent flat front face in an interior rectangle below the clear surface. (*Id.* at 105.) Samsung argues that the interior

rectangle is centered both horizontally and vertically and is surrounded by narrow borders on the two opposing sides with wider borders on the remaining sides. (*Id.*) Samsung argues that although the K921 does not have a noble and shape it wouldn't obvious to a designer to add a shape to correspond to any earpiece and rotate the orientation to modify the device for telephone use. (*Id.*)

Analysis

Samsung supports its obviousness contention with only attorney argument. (*See id.* at 104-105.) Samsung presents no supporting testimony. I find Samsung's argument without merit.

Samsung has the burden to prove invalidity by clear and convincing evidence, including that the references it seeks to combine are in the prior art. Samsung does not present any evidence in its brief that the LG Chocolate is prior art to the D'678 design. Nor does Samsung present any evidence that the K921 is prior art. Thus, I find Samsung has failed to set forth a *prima facia* case of obviousness.

However, even if the LG Chocolate was prior art, I do not find it to be similar enough to the claimed design to constitute a primary reference.

LG Chocolate (RPX-89)	D'678 Patent (JX-2)
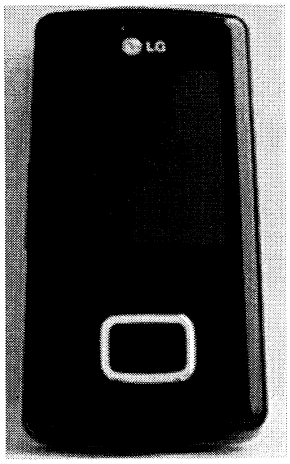	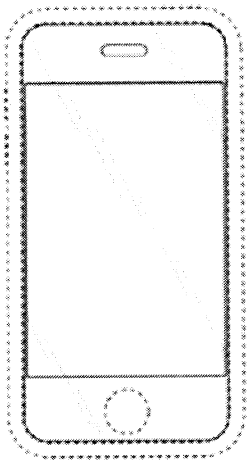

As is plainly seen in the above illustrations, the LG Chocolate differs from the design of the D'678 patent such that major modifications would be needed to alter the LG Chocolate to give it a substantially similar impression to the D'678 patent. In particular, I find that with its prominent button feature on the front face, off-center display screen, and rounded top and bottom edges, among other elements, the LG Chocolate is not substantially the same design as the D'678 patent. Therefore, I do not find that the LG Chocolate qualifies as a primary reference and thus I find for this additional reason that Samsung has failed to set forth a *prima facia* case of obviousness. *Apple, Inc. v. Samsung Electronics Co., Ltd.*, 678 F.3d 1314, 1332 (Fed. Cir. 2012) (There can be no finding of obviousness "[i]n the absence of a qualifying primary reference.")

Moreover, Samsung argues that "it would have been obvious to one of ordinary skill in designing electronic devices to add a shape to correspond to an earpiece and rotate the orientation to modify the device for telephone use." However, Samsung presents no testimony from one of ordinary skill in the art. Attorney argument is not a substitute for actual evidence.

See Johnston v. IVAC Corp., 885 F.2d 1574, 1581 (Fed.Cir.1989) (noting that "Attorneys' argument is no substitute for evidence."). Accordingly, for this reason too, I find Samsung has failed to prove by clear and convincing evidence that the design claimed in the D'678 patent is obvious in light of the LG Chocolate in combination with the K921.

2. D'678 Patent Invalid – New Matter

Samsung argues that the D'678 is invalid due to the introduction of new matter in its application history. (RIB at 106.) Samsung argues that on February 23, 2009, when Apple filed the D'678 application, it submitted a design with oblique lines only in the interior rectangle. (*Id.*) Samsung argues that according to the MPEP oblique lines must be used to designate transparency or reflectivity. (*Id.*) Samsung argues that after receiving a rejection from the PTO on obviousness grounds, Apple submitted new drawings to replace those in the application and that the new drawings included oblique line shading across the entire surface, not just the interior rectangle. (*Id.* at 107.) Samsung argues that the new drawings were again rejected by the PTO on obviousness grounds. (*Id.* at 108.) Samsung asserts that in response to that rejection, Apple argued that its design was not obvious because it had "a substantially continuous transparent surface on an electronic device." (*Id.*) Samsung argues that Apple could have only made such a response after its amendment, which Apple argued did not add new matter. (*Id.*) Samsung argues that the law is clear that no new matter can be added to a patent application. (*Id.*) Samsung argues that Apple's positions in this investigation confirm that it made misrepresentations to the PTO. (*Id.* at 109.) Samsung argues that Apple should not benefit from its misrepresentations to the PTO. (*Id.*) Thus, Samsung argues the D'678 patent is invalid for

"inclusion of new matter in its application, especially in light of Apple's misrepresentations." (*Id.*)

Analysis

Samsung fails to raise this argument in its Pre-hearing brief and thus it is waived pursuant to Ground Rule 9.2. Even if it were not waived, Samsung's argument is frivolous.

The front face of the D'678 patent explicitly states:

> This application is a divisional application of U.S. Design Patent Application No. 29/282,831, which is a continuation application of U.S. Design Patent Application No. 29/270,887, filed January 5, 2007, now U.S. Design Patent No. D580,387, the disclosures of which are incorporated herein in their entirety by reference thereto.

JX-8 at 33. As is plainly seen in the figure below, the design disclosed in Application No. 29/270,887 ("the '887 application") has the same oblique shading across the entire front surface of the device as the design disclosed in the D'678 patent.

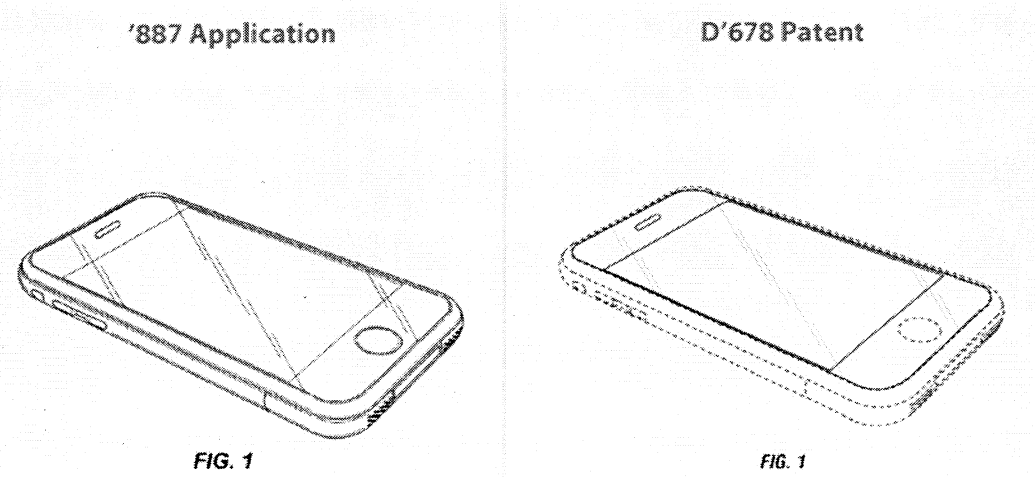

Because the D'678 patent incorporated by reference the disclosure from the '887 application it cannot be said that the new drawings submitted during prosecution that extended the oblique

shading from the interior rectangle to the entire front surface of the device is new matter. Accordingly, I also find Samsung wrong on the merits.

Moreover, it is unclear what the legal basis for Samsung's argument is. From Samsung's brief it appears Samsung could be arguing that I should invalidate the patent based on an alleged violation of 35 U.S.C. § 132 or 37 CFR § 1.121(f), but at the same time Samsung seems to argue that I should invalidate because of Apple's misrepresentations to the PTO. If Samsung is arguing the latter then it utterly failed to adduce any evidence of inequitable conduct by Apple that would support such an allegation.

G. Domestic Industry - "Technical Prong"

"[T]he technical prong requires proof that the patent claims cover the articles of manufacture that establish the domestic industry." *Crocs*, 598 F.3d at 1307. With respect to design patents, this requires applying *Gorham's* ordinary observer test to compare the overall impressions of the design of Domestic Industry products and the asserted designs. *See id.* (finding the "overall effects of the design present in both the '789 patent and Crocs shoes" to be substantially the same in the eyes of the ordinary observer).

Parties' Positions

Apple contends it satisfies the technical prong because the claimed design of the D'678 patent and the design of its domestic industry products create substantially the same overall impression in the eyes of an ordinary observer. (CIB at 64.) Specifically, Apple contends every iPhone—original, 3G, 3GS, 4, and 4S—embodies the D'678 patent. (*Id.* at 72-77.) First Apple argues that all of the major visual elements of the D'678 patent appear in the original iPhone. Specifically, Apple contends that the iPhone's front surface is generally rectangular in shape

with evenly curved corners, the flat front surface is comprised of a single piece of transparent material that extends edge-to-edge, and a single lozenge-shaped speaker slot is centered on the rectangular display with narrow balanced borders on the lateral sides and wider balanced borders above and below. (*Id.* at 72-73.)

D'678 Patent	iPhone (Original) (CPX-3)
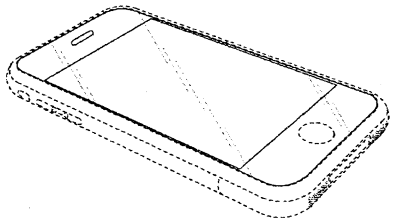	

D'678 Patent	iPhone (Original) (CPX-3)
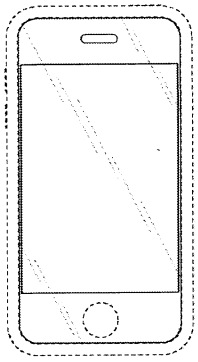	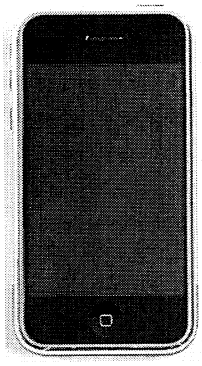
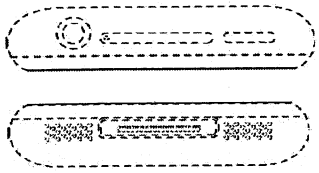	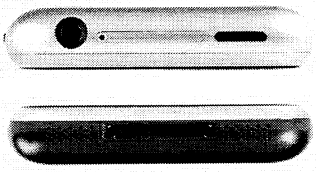
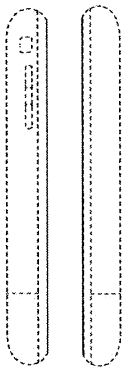	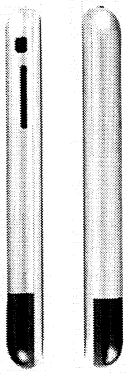

Apple contends the iPhone 3G, 3GS, 4, and 4S front face designs are also substantially similar to the original iPhone and therefore also embody the D'678 patent. (CIB at 73-74.)

D'678 Patent	iPhone 3GS (CPX-5)	iPhone 4 (CPX-6)
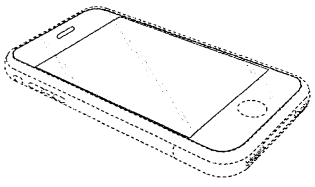		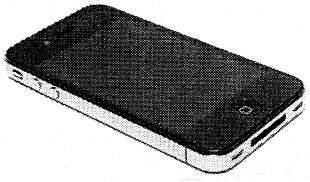

D'678 Patent	iPhone 3GS (CPX-5)	iPhone 4 (CPX-6)
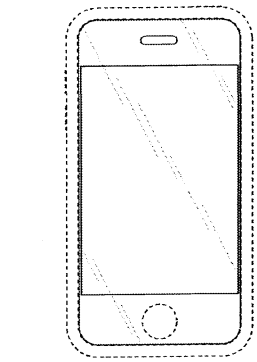	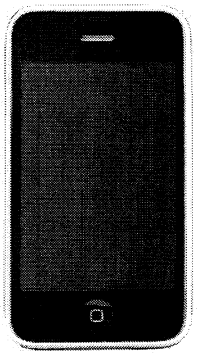	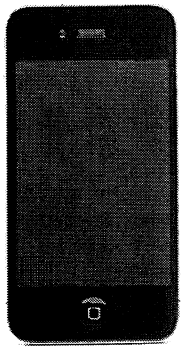
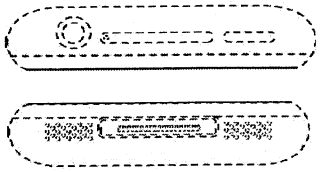	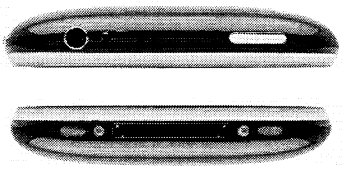	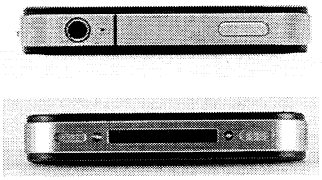
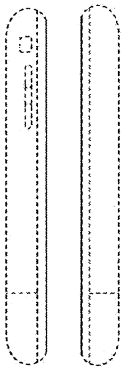	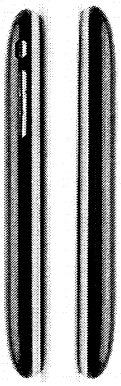	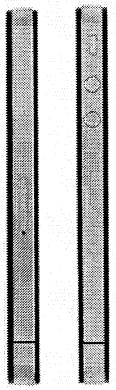

Because Staff agrees with Apple's claim construction and analysis regarding the Domestic Industry products, the Staff believes that Apple has met its burden in establishing that the iPhone devices practice the claimed design of the D'678 patent. (SIB at 40-41.)

Samsung first contends that the iPhones do not practice the D'678 patent because the use of oblique parallel lines on the front surface of D'678 indicates that the surface is transparent or reflective and flat across the entire front face because none of the features shown on the front

face interrupt the surface or change dimension. (RIB at 98-99.) Thus, Samsung contends the oblong feature, the interior rectangle, and the optional circular feature are under the flat transparent or reflective surface, or they are merely surface decorations because the patent does not show any of them as openings in the surface either by interrupting the oblique lines or by drawing them with contour lines or other shading techniques to indicate depth or dimension change. As none of the iPhones have a continuous flat surface without interruption or openings as shown in the D'678, Samsung contends that the Domestic Industry products do not practice the D'678 patent. (*Id.*)

Samsung also cites a number of differences between the Domestic Industry products and the D'678 patent, including a front surface that (i) has borders to the left and right of the interior rectangle that are extremely narrow, in the proportion and shape shown in the drawings of the D'678 patent, and which is homogeneous in appearance with the interior rectangle, (ii) has an oblong shape in the precise shape, proportion and positioning shown in the drawings of the D'678 patent that are homogenous with the rest of the front (including without change in texture, color or contrast), (iii) has no additional detail on the front surface, (including without interruptions, buttons or other details (such as a circular detail to the left or right of the oblong shape) other than an optional circular button on the lower part of the front surface, (iv) has an external rectangular shape with evenly rounded corners of the shape and proportion shown in the drawings of the D'678 patent, and (v) extends to the outside perimeter (including without any bezel or rim visible from the front). (RIB at 99.)

Samsung also contends that the claimed front face sits above the housing or bezel in the D'678 design. (RIB at 100). Samsung also contends that the Domestic Industry products do not

practice the D'678 patent because the patent does not claim the home screen button found on all Apple phones. (*Id.*) Samsung alleges that Apple also claimed that the button is "the only visible physical control on the front faces of these devices," and that it is "not an ordinary button, but a distinctive design." (*Id.*)

Analysis

When comparing the D'678 patent to the physical exhibits of the iPhone original (CPX-0003), 3G (CPX-0004), 3GS (CPX-0005), 4 (CPX-0006), and 4S (CPX-0007) (collectively, "D'678 Domestic Industry products"), the overall impression of the D'678 patent is substantially similar to the D'678 Domestic Industry products. Both the D'678 patent and the Domestic Industry products give an impression of simplicity and minimalism. Both the claimed design of the D'678 patent and the D'678 Domestic Industry products include a single continuous piece of transparent material that is rectangular in overall shape with rounded corners. (*Compare* JX-0002 *with* CPX-0003, CPX-0004, CPX-0005, CPX-0006, CPX-0007). In addition, for both the claimed design of the D'678 patent and the D'678 Domestic Industry products, the transparent material is flat and extends edge-to-edge across the entire front surface. (*Id.*) Also, for both the claimed design of the D'678 patent and the D'678 Domestic Industry products, a rectangular element surrounded by narrow balanced borders on the lateral sides and wider balanced borders above and below is visible in this transparent material. (*Id.*) Finally, for both the claimed design of the D'678 patent and the D'678 Domestic Industry products there is a lozenge-shaped element horizontally centered in the area above the rectangular element. (*Id.*). Based on the effect and placement of all the major design elements, the claimed design of the D'678 patent and D'678

Domestic Industry products create the same distinctive overall look which an ordinary observer familiar with the prior art would find substantially similar.

I again find the minor differences highlighted by Samsung unpersuasive. Although there is a small variation between the width of the border elements of the D'678 patent and the D'678 Domestic Industry products, this difference is slight and would not demonstrate a significant difference to an ordinary observer. (*Compare* JX-0002 *with* CPX-0003, CPX-0004, CPX-0005, CPX-0006, CPX-0007). Furthermore, although the lozenge shaped feature on the D'678 Domestic Industry products is not completely flush with the rest of the front surface, the differences tend to blend into the background of the display due to their size and coloring and thus do not preclude finding the two designs substantially similar. (*Id.*) In addition, D'678 Domestic Industry products have a few unobtrusive features (such as a circular detail to the left or right of the oblong shape) which do not substantial alter the overall impression of the design.

Accordingly, I find that an ordinary observer would conclude that the overall visual impression of the D'678 Domestic Industry products is substantially the same as the overall visual impression of the design claimed in the D'678 Patent. I also find that any differences between the D'678 Domestic Industry products and the claimed design of the D'678 patent do not alter the similarity between the overall impressions of the designs for an ordinary observer.

VII. U.S. Patent No. 7,479,949

A. Introduction

U.S. Patent No. 7,479,949 ("the '949 patent") is titled "Touch Screen Device, Method, and Graphical User Interface for Determining Commands by Applying Heuristics." The patent issued on January 20, 2009, to Jobs, et al. and was assigned to Apple, Inc. (JX-003, cover page.)

The '949 patent is a continuation of U.S. patent application Ser. No. 11/850,635, "Touch Screen Device, Method, and Graphical User Interface for Determining Commands by Applying Heuristics," filed Sep. 5, 2007, which claims the benefit of U.S. Provisional Patent Application Nos. 60/937,991, "Touch Screen Device, Method, and Graphical User Interface for Determining Commands by Applying Heuristics," filed Jun. 29, 2007; 60/937,993, "Portable Multifunction Device," filed Jun. 29, 2007; 60/879,469, "Portable Multifunction Device," filed Jan. 8, 2007; 60/879,253, "Portable Multifunction Device," filed Jan. 7, 2007; and 60/824,769, "Portable Multifunction Device," filed Sep. 6, 2006. (JX-003 at 1:8-19.)

The '949 patent is directed to a computing device that performs precise movements of graphics in response to imprecise user gestures. The invention detects finger contacts on a touch screen display and applies "heuristics" to determine the appropriate command to execute based on a gesture from the finger contacts. (JX-003, Abstract.) For example, a web page may scroll one-dimensionally upward in the vertical direction in response to an imprecise substantially vertical upward swipe gesture performed by a user, but scroll two-dimensionally in response to an imprecise swipe gesture that is not within a predetermined angle (*e.g.*, 27°) of being perfectly vertical. (*Id.* at 64:17-33, 45-46.)

B. Asserted Claims

Apple argues that Samsung infringes claims 1, 4-6, and 10-20 of the '949 patent. The asserted claims read as follows:

1. A computing device, comprising:

a touch screen display;

one or more processors;

memory; and

one or more programs, wherein the one or more programs are stored in the memory and configured to be executed by the one or more processors, the one or more programs including:

instructions for detecting one or more finger contacts with the touch screen display;

instructions for applying one or more heuristics to the one or more finger contacts to determine a command for the device; and

instructions for processing the command;

wherein the one or more heuristics comprise:

a vertical screen scrolling heuristic for determining that the one or more finger contacts correspond to a one-dimensional vertical screen scrolling command rather than a two-dimensional screen translation command based on an angle of initial movement of a finger contact with respect to the touch screen display;

a two-dimensional screen translation heuristic for determining that the one or more finger contacts correspond to the two-dimensional screen translation command rather than the one-dimensional vertical screen scrolling command based on the angle of initial movement of the finger contact with respect to the touch screen display; and

a next item heuristic for determining that the one or more finger contacts correspond to a command to transition from displaying a respective item in a set of items to displaying a next item in the set of items.

...

4. The computing device of claim 1, wherein, in one heuristic of the one or more heuristics, a contact comprising a finger swipe gesture that initially moves within a predetermined angle of being perfectly vertical with respect to the touch screen display corresponds to the one-dimensional vertical screen scrolling command.

5. The computing device of claim 1, wherein, in one heuristic of the one or more heuristics, a contact comprising a moving finger gesture that initially moves within a predefined range of angles corresponds to the two-dimensional screen translation command.

6. The computing device of claim 1, wherein, in one heuristic of the one or more heuristics, a contact comprising a finger swipe gesture that initially moves within a predetermined angle of being perfectly horizontal with respect to the touch screen display corresponds to a one-dimensional horizontal screen scrolling command rather than the two-dimensional screen translation command.

...

10. The computing device of claim 9, wherein the first set of heuristics comprises a heuristic for determining that the one or more first finger contacts correspond to a one-dimensional horizontal screen scrolling command rather than the two-dimensional screen translation command based on the angle of initial movement of the finger contact with respect to the touch screen display.

11. A computer-implemented method, comprising: at a computing device with a touch screen display,

detecting one or more finger contacts with the touch screen display;

applying one or more heuristics to the one or more finger contacts to determine a command for the device; and

processing the command;

wherein the one or more heuristics comprise:

> a vertical screen scrolling heuristic for determining that the one or more finger contacts correspond to a one-dimensional vertical screen scrolling command rather than a two-dimensional screen translation command based on an angle of initial movement of a finger contact with respect to the touch screen display;
>
> a two-dimensional screen translation heuristic for determining that the one or more finger contacts correspond to the two-dimensional screen translation command rather than the one-dimensional vertical screen scrolling command based on the angle of initial movement of the finger contact with respect to the touch screen display; and
>
> a next item heuristic for determining that the one or more finger contacts correspond to a command to transition from displaying a respective item in a set of items to displaying a next item in the set of items.

12. The computer-implemented method of claim 11, including:

while displaying a web browser application,

detecting one or more first finger contacts with the touch screen display;

applying a first set of heuristics for the web browser application to the one or more first finger contacts to determine a first command for the device; and

processing the first command;

wherein the first set of heuristics comprises:

the vertical screen scrolling heuristic; and

the two-dimensional screen translation heuristic;

and while displaying a photo album application,

detecting one or more second finger contacts with the touch screen display;

applying a second set of heuristics for the photo album application to the one or more second finger contacts to determine a second command for the device; and

processing the second command;

wherein the second set of heuristics comprises:

the next item heuristic, wherein the respective item in the set of items is a respective image in a set of images; and

a heuristic for determining that the one or more second finger contacts correspond to a command to transition from displaying the respective image in the set of images to displaying a previous image in the set of images.

13. The computer-implemented method of claim 12, wherein the first set of heuristics comprises a heuristic for determining that the one or more first finger contacts correspond to a one-dimensional horizontal screen scrolling command rather than the two-dimensional screen translation command based on the angle of initial movement of the finger contact with respect to the touch screen display.

14. The computer-implemented method of claim 11, wherein, in one heuristic of

the one or more heuristics, a contact comprising a finger swipe gesture that initially moves within a predetermined angle of being perfectly vertical with respect to the touch screen display corresponds to the one-dimensional vertical screen scrolling command.

15. The computer-implemented method of claim 11, wherein, in one heuristic of the one or more heuristics, a contact comprising a moving finger gesture that initially moves within a predefined range of angles corresponds to the two-dimensional screen translation command.

16. The computer-implemented method of claim 11, wherein, in one heuristic of the one or more heuristics, a contact comprising a finger swipe gesture that initially moves within a predetermined angle of being perfectly horizontal with respect to the touch screen display corresponds to a one-dimensional horizontal screen scrolling command rather than the two-dimensional screen translation command.

17. A computer readable storage medium having stored therein instructions, which when executed by a device with a touch screen display, cause the device to:

detect one or more finger contacts with the touch screen display;

apply one or more heuristics to the one or more finger contacts to determine a command for the device; and

process the command;

wherein the one or more heuristics comprise:

> a vertical screen scrolling heuristic for determining that the one or more finger contacts correspond to a one-dimensional vertical screen scrolling command rather than a two-dimensional screen translation command based on an angle of initial movement of a finger contact with respect to the touch screen display;
>
> a two-dimensional screen translation heuristic for determining that the one or more finger contacts correspond to the two-dimensional screen translation command rather than the one-dimensional vertical screen scrolling command based on the angle of initial movement of the finger contact with respect to the touch screen display; and
>
> a next item heuristic for determining that the one or more finger contacts correspond to a command to transition from displaying a respective item in a set of items to displaying a next item in the set of items.

18. The computer readable storage medium of claim 17, wherein the computer readable medium has stored therein instructions, which when executed by a device with a touch screen display, cause the device to:

while displaying a web browser application,

detect one or more first finger contacts with the touch screen display;

apply a first set of heuristics for the web browser application to the one or more first finger contacts to determine a first command for the device; and

process the first command;

wherein the first set of heuristics comprises:

the vertical screen scrolling heuristic; and

the two-dimensional screen translation heuristic;

and while displaying a photo album application,

detect one or more second finger contacts with the touch screen display;

apply a second set of heuristics for the photo album application to the one or more second finger contacts to determine a second command for the device; and

process the second command;

wherein the second set of heuristics comprises:

the next item heuristic, wherein the respective item in the set of items is a respective image in a set of images; and

a heuristic for determining that the one or more second finger contacts correspond to a command to transition from displaying the respective image in the set of images to displaying a previous image in the set of images.

19. The computer readable storage medium of claim 17, wherein, in one heuristic of the one or more heuristics, a contact comprising a finger swipe gesture that initially moves within a predetermined angle of being perfectly vertical with respect to the touch screen display corresponds to the one-dimensional vertical

screen scrolling command.

20. The computer readable storage medium of claim 17, wherein, in one heuristic of the one or more heuristics, a contact comprising a moving finger gesture that initially moves within a predefined range of angles corresponds to the two-dimensional screen translation command.

(JX-003 at 122:37-126:43.)

C. Level of Ordinary Skill in the Art

Pursuant to Order No. 16, issued on March 6, 2012, one of ordinary skill in the art relevant to the '949 patent has at least a Bachelor's degree in Computer Science or a related field, and either: (1) a Master's degree or higher in Computer Science or a related field with an emphasis on human-computer interaction; or (2) two to three years of experience in the field of user interface design for computers or mobile devices. (CX-2352C at 8.)

D. Claim Construction

1. "heuristics"

Pursuant to Order No. 16, the term "heuristic" is properly construed to mean "one or more rules to be applied to data to assist in drawing inferences from that data."

2. "one or more heuristics"

Pursuant to Order No. 16, the term "one or more heuristics" is properly construed in accordance with its plain and ordinary meaning to one of ordinary skill in the art at the time of the invention.

3. other claim terms

Pursuant to Order No. 16, the following undisputed claim constructions shall also apply: (1) "next item heuristic"/"next item command" is construed in accordance with its plain and ordinary meaning; (2) "two-dimensional screen translation" is construed to mean "movement of

screen content in two dimensions"; (3) "vertical screen scrolling" is construed to mean "movement of screen content in the vertical direction"; and (4) "based on an angle of initial movement" is construed in accordance with its plain and ordinary meaning. (*See* CX-2352C at 8-9.)

E. Infringement

Apple alleges that each of the '949 Accused Products infringe claims 1, 4-6 and 10-20 of the '949 patent. (CIB at 98-99.)

1. Direct Infringement

Apple's expert, Dr. Balakrishnan, testified in detail that the '949 Accused Products infringe the asserted claims of the '949 patent. (*See* CX-2428C (Balakrishnan DWS) at Q&A 87-162.) In particular, Dr. Balakrishnan testified that it is the combination of the Browser application and Gallery application in the '949 Accused Products that infringes the asserted claims. (*Id.* at Q&A 82.) According to Dr. Balakrishnan, the Browser application uses a vertical screen scrolling heuristic, a two-dimensional screen translation heuristic, and a horizontal screen scrolling heuristic, and the Gallery application uses a next item heuristic and a previous item heuristic.[8] (*Id.*) In support of his infringement opinion, Dr. Balakrishnan relied on his inspection of Samsung's accused products, the source code for the accused products, and the deposition testimony of Samsung's own witnesses who testified about the operation of the accused products and the source code. (*Id.* at Q&A 83.)

---

[8] The Browser application is used to view web pages. (CX-2428C (Balakrishnan DWS) at Q&A 82.) The Gallery application is used to view images. (*Id.*)

Neither Dr. Balakrishnan nor Apple, however, addressed the '949 Design Around Products. (*See generally*, CIB; *see also id.* at Q&A 86 ("I understand that certain Samsung products have been modified. My analysis does not cover these products. For purposes of my analysis of infringement of the '949 patent, my analysis applies to the products shown in CDX0793C.").) Based upon this lack of evidence, I find Apple has failed to prove by a preponderance of the evidence that the '949 Design Around Products infringe the asserted claims of the '949 patent.

Regardless, Samsung's expert, Dr. van Dam, and Samsung employee Kiwon Lee, convincingly testified that these products do not satisfy all the elements of claim 1. (*See* RX-3632C (Lee RWS) at Q&A 24-25, 37-39; RX-3636C (van Dam RWS) at Q&A 504-509, 511-520.) Specifically, the evidence shows that the Design Around Products characterized as "Category B" devices by Samsung in its initial post-hearing brief do not meet the "vertical screen scrolling heuristic" or "one-dimensional vertical screen scrolling command" limitations of the asserted claims. (*See* RX-3632C (Lee RWS) at Q&A 24-25; RX-3636C (van Dam RWS) at Q&A 504-509.) Likewise, the evidence shows that the Design Around Products characterized as "Category C" devices by Samsung in its initial post-hearing brief do not determine whether to perform a vertical screen scrolling command, two-dimensional screen scrolling command or next item command "based on the angle of initial movement." (*See* RX-3632C (Lee RWS) at Q&A 37-39; RX-3636C (van Dam RWS) at Q&A 511-520.)

a. Claim 1

Dr. Balakrishnan testified in detail that the '949 Accused Products meet each of the limitations of independent claim 1 and thus infringe claim 1 of the '949 patent. (*See* CX-2428C (Balakrishnan DWS) at Q&A 39-43, 87-122.)

Samsung argues that the '949 Accused Products do not infringe claim 1, because: (1) the accused products do not determine a vertical screen scrolling command based on "an angle" of initial movement; (2) the accused products do not determine a vertical screen scrolling command based on "initial movement"; and (3) the accused products do not employ heuristics for scrolling or a next item command. (*See* RIB at 112-122.)

As discussed in more detail below, I am not persuaded by any of Samsung's arguments. Thus, in light of the evidence presented by Apple, I find that Apple has proven by a preponderance of the evidence that the '949 Accused Products infringe claim 1 of the '949 patent.

(1) Do the accused products determine a vertical screen scrolling command "based on an angle of initial movement"?

The Parties' Positions

Apple argues that the accused products determine a vertical screen scrolling command "based on an angle of initial movement." With regard to the '949 Accused Products running version 2.2, 2.3, or 3.x of the Android operating system, Apple argues that these products determine which type of screen movement to perform based on the angle of initial movement by

(*Id.*) Apple argues that nothing in the '949 patent claims require that an angle actually be calculated. (*Id.* at 106.) Apple argues the fact that these products perform vertical screen scrolling or a two-dimensional translation based on

meets the "based on" claim language. (*Id.*) Apple argues that contrary to Samsung's contention there is nothing in the prosecution history that disclaims the scope of the limitation "based on an angle of initial movement" and that the allegedly disavowing statements are neither clear nor unmistakable. (*Id.* at 107-109.)

With regard to the '949 Accused Products running version 4.0 of the Android operating system, Apple argues that these products actually calculate the angle of initial movement and use it to determine whether to perform a vertical screen scroll command or a two-dimensional screen translation command. (*Id.* at 109.) Apple argues that these products calculate the angle between P1 and P2, and the angle between P3 and P4 and then compute a weighted average of the two angles to determine whether to execute a vertical screen scroll or two-dimensional screen translation. (*Id.* at 110.) Apple argues that this meets the "based on" language in the claim. (*Id.*)

Samsung argues that the accused products do not satisfy the "based on an angle of initial movement" limitation in the claims. With regard to the '949 Accused Products running version 2.2, 2.3, or 3.x of the Android operating system, Samsung argues that these products

(RIB at 115.) Samsung argues

that

cannot satisfy the limitation "based on an angle of initial movement" because Apple surrendered that subject matter during prosecution to overcome prior art. (*Id.* at 110-111.) Samsung also argues that and as such cannot be "an angle of initial movement." (*Id.* at 111.)

With regard to the '949 Accused Products running Android version 4.0, Samsung argues that these products do not vertically scroll based on an angle of initial movement. (*Id.* at 118.) Samsung argues that in these products the determination of scrolling mode, either vertical, two-dimensional, or horizontal is not based on an angle of initial movement of the finger, but rather on a number of ACTION.MOVE events. (*Id.* at 119.) Samsung argues that any scrolling commands actually determined and performed in Android 4.0 devices are based on a value that does not represent the angle of initial movement and thus cannot infringe the asserted claims. (*Id.*)

The Staff argues that in the '949 Accused Products that run Android 2.2, 2.3, or 3.x, the effectively determines scrolling based on an angle. (SIB at 49.) The Staff argues that the claims of the '949 patent require scrolling based on an angle and do not require any type of calculation of an angle. (*Id.*) Staff argues that although the comparison method used by the accused products may not calculate an angle, the accused products still perform the determination based on angle of movement. (*Id.* at 49-50.) With regard to Samsung's argument that Apple disclaimed the comparison method used in the accused products, the Staff argues that the comments in the prosecution history are not clear and unmistakable and thus no there is no disclaimer. (*Id.* at 51.) As for those accused products

running Android 4.0, the Staff argues that in those products scrolling is determined based on an angle of initial movement as to the first two motion events. (*Id.* at 54-55.) The Staff argues that the limitation "based on an angle of initial movement" merely specifies how scrolling is determined. (*Id.* at 55.) The Staff argues that contrary to Samsung's assertion, scrolling in the accused products is based on an angle of initial movement regardless of when the movement occurs. (*Id.*)

Analysis

Claim 1 of the '949 patent requires that the heuristics determine whether to perform one-dimensional vertical screen scrolling or two-dimensional screen translation "based on an angle of initial movement." The parties all seem to agree that the '949 Accused Products implement this limitation differently depending on whether the accused products are running versions 2.2, 2.3 or 3.x of the Android operating system or version 4.0 of the Android operating system. Thus, I will address Samsung's non-infringement argument based on the version of the Android operating system running on the '949 Accused Products.

'949 Accused Products Running Android Operating System Versions 2.2, 2.3, or 3.x

With regard to those '949 Accused Products running Android operating system versions 2.2, 2.3, or 3.x, the evidence shows that the Browser application in the accused products determines which type of screen movement to perform

(*Id.*)

Samsung argues that because the accused products the decision to perform a vertical screen scroll or two-dimensional screen translation is not based on an angle of initial movement. I disagree. Nothing in the plain and ordinary meaning of the claim limitation requires the calculation of an angle, only that the decision to perform a vertical screen scroll or two-dimensional screen translation be "based on" an angle of initial movement.

As Dr. Balakrishnan convincingly testified

Dr. Balakrishnan convincingly shows that although the Browser application does not calculate an angle, the decision of which type of screen movement to perform based on a comparison of deltaX and deltaY values is still a decision "based" on an angle of initial movement. According, for the reasons discussed above, I have no difficulty finding that the decision to perform a vertical screen scroll or two-dimensional screen translation in the '949 Accused Products running versions 2.2, 2.3, or 3.x of the Android operating system is "based on an angle of initial movement."

Samsung argues that Apple cannot now claim that the comparison of deltaX and deltaY values in the Browser application meets the "based on the angle of initial movement" limitation

in claim 1 because the patent applicant disclaimed that method during prosecution to distinguish the invention over prior art. (RIB at 110-112.) In particular, Samsung argues that "[b]ecause Apple distinguished the claimed invention over Chiu by adding a new claim limitation - 'based on an angle of initial movement' – this claim term cannot capture the rules disclosed in Chiu that compare horizontal and vertical movement of the finger to distinguish between different scrolling modes." (*Id.* at 111.) I find this argument not persuasive.

To find prosecution history disclaimer the alleged disavowing action or statement must be clear and unmistakable. *See Omega Eng'g. Inc. v. Raytek Corp.*, 334 F.3d 1314, 1325-26 (Fed. Cir. 2003) ("Consequently, for prosecution disclaimer to attach, our precedent requires that the alleged disavowing actions or statements made during prosecution be both clear and unmistakable.") Here, the evidence is not even close.

During prosecution of the '949 patent, the applicant had an in-person interview with the examiner where they discussed, *inter alia*, newly found references, Chiu et al. ("Chiu") and Cheston et al. ("Cheston"). (RX-1131 at 10.)[9] In response to that interview and a subsequent phone call with the patent examiner, the applicant filed an amendment with accompanying remarks on June 12, 2008. (*Id.* at 10-12.) In the amendment the applicant amended the language of claim 1 to add the limitation "based on an angle of initial movement of a finger contact with respect to the touch screen display." (*Id.* at 25; *see also id.* at 27-28 (claim 11), 30 (claim 17).) In his remarks, the applicant stated, in relevant part, that:

All of claims 1-20 include the "vertical screen scrolling heuristic" element:

---

[9] So that there is no confusion, the page numbers to which I refer in RX-1131 are the page numbers listed after the exhibit number in the upper left hand corner of each page of the exhibit.

> "a vertical screen scrolling heuristic for determining that the one or more finger contacts correspond to a one-dimensional vertical screen scrolling command rather than a two-dimensional screen translation command based on an angle of initial movement of a finger contact with respect to the touch screen display" (Independent claims 1, 11, and 17).

As shown in the three charts in the preceding section, the references deemed most closely related to the subject matter of the claims do not teach or suggest this claim element, either expressly or inherently.

Similarly, all of claims 1-20 include the "two-dimensional screen translation heuristic" element:

> "a two-dimensional screen translation heuristic for determining that the one or more finger contacts correspond to the two-dimensional screen translation command rather than the one-dimensional vertical screen scrolling command based on the angle of initial movement of the finger contact with respect to the touch screen display" (Independent claims 1, 11, and 17).

As shown in the three charts in the preceding section, the references deemed most closely related to the subject matter of the claims do not teach or suggest this claim element, either expressly or inherently.

(*Id.* at 107.)

In the chart referred to in the above remarks, the applicant distinguished the Chiu and Cheston references on a claim-by-claim, element-by-element basis. (*Id.* at 88-106.) With regard to Chiu, the applicant stated:

> Chiu discloses a heuristic for determining that a multifinger finger contact corresponds to a one-dimensional vertical screen scrolling command at paragraphs 0022 and 0023.
>
> But Chiu does not disclose a heuristic "for determining that the one of more finger contacts correspond to a one-dimensional vertical screen scrolling command rather than a two-dimensional screen translation command based on an angle of initial movement of a finger contact with respect to the touch screen display" as required by this claim.

(*Id.* at 89-90 (underlining in original).) With regard to Cheston, the applicant stated:

> Cheston discloses performing "diagonal" scrolling if two or more fingers are detected on a touch pad and performing "conventional" scrolling if a single finger is detected on the touch pad at paragraph 0013 and Figure 3.
>
> But Cheston does not disclose a heuristic "for determining that the one or more finger contacts correspond to a one-dimensional vertical screen scrolling command rather than a two-dimensional screen translation command based on an angle of initial movement of a finger contact with respect to the touch screen display" as required by this claim.

(*Id.* (underlining in original).)

Contrary to Samsung's argument, it is not clear whether the applicant was distinguishing the claimed invention over Chiu based on the "based on an angle of initial movement" language added to the claim or on other claim language such as "determining that the one or more finger contacts correspond to a one-dimensional vertical screen scrolling command rather than a two-dimensional screen translation command." Moreover when I considered the applicant's comments regarding Cheston, the matter becomes more muddled. Thus, it cannot be said that the applicant's comments are clear and unmistakable.

In fact, to the extent the evidence suggests one interpretation of the applicant's comments regarding Chiu over another, I find the evidence supports the notion that the applicant was distinguishing the claimed invention over Chiu based on the "determining that the one or more finger contacts correspond to a one-dimensional vertical screen scrolling command rather than a two-dimensional screen translation command" claim language rather than the addition of the "based on an angle of initial movement" claim language as Samsung argues. After all, the evidence shows that Chiu "does not distinguish between one-dimensional screen scrolling and two-dimensional screen translation, which is what the '949 patent discloses." (*See* Tr. at 1244:3-

22; CX-2428C (Balakrishnan DWS) at Q&A 110.) Further, the evidence shows that the claim language "based on an angle of initial movement of a finger contact with respect to the touch screen" more closely comports with the applicant's remarks distinguishing the claimed invention over the Cheston reference, which determines the type of screen movement to perform based on the number of fingers detected on the touch pad. (*See* Tr. at 2082:18-2083:9; CX-2428C (Balakrishnan DWS) at Q&A 110; *see also* Tr. at 2083:22-2086:8.)

Accordingly, for the reasons discussed above, I find that the applicant's purported disclaimer is not an unambiguous disavowal of claim scope. Thus, I find no disclaimer.

'949 Accused Products Running Android Operating System Version 4.0

With regard to those '949 Accused Products running Android operating system version 4.0, the evidence shows that the Browser application in the accused products actually calculates an angle of initial movement and then uses that angle to determine whether to perform a vertical screen scroll command or a two-dimensional screen translation command. (Tr. at 1225:21-1226:20; CDX-1243.) In particular, the evidence shows that the Browser application calculates the angle between P1 (the point where the finger touches the screen) and P2 (the first point outside the slop zone), and the angle between P2 and P3 (the next point outside the slop zone), and then computes a weighted average of the two angles with the angle between P1 and P2 weighted at 80% and the angle between P2 and P3 weighted at 20%. (Tr. at 1225:21-1226:13; CDX-1243.) The Browser application then uses to decide whether to perform a vertical screen scroll command or a two-dimensional screen translation command. (Tr. at 1226:13-15; CDX-1243.)

Contrary to Samsung's argument, the fact that the is not the angle of initial movement does not negate infringement. The evidence clearly shows that is based on the angle of initial movement and thus the decision to perform either a vertical screen scroll command or two-dimensional screen translation command must also be based on the angle of initial movement. (Tr. at 1226:2-20; CDX-1243.) Nothing in the language of claim 1 requires that the angle of initial movement be actually calculated, but by the same token, nothing in the claim prohibits the computation of the angle of initial movement or any additional mathematical manipulation of the angle; claim 1 only requires that the determination of whether to perform a vertical screen scroll command or two-dimensional screen translation command be based on the angle of initial movement.

Accordingly, for the reasons discussed above, I find that the decision to perform a vertical screen scroll command or two-dimensional screen translation command in the '949 Accused Products running version 4.0 of the Android operating system is "based on an angle of initial movement."

(2) Do the accused products determine a vertical screen scrolling command based on "initial movement"?

The Parties' Positions

Apple argues that the accused products determine a vertical screen scrolling command based on an angle of "initial movement." Apple argues that any touch screen device must account for noise by filtering out signals that do not constitute genuine finger movement. (CIB at 101.) According to Apple, the '949 Accused Products accomplish this by using a slop threshold, and filtering out finger movements that do not exceed this threshold. (*Id.* at 101, 103-104.) Apple argues that one of ordinary skill in the art would expect a touch screen to perform a

preliminary check to account for this input slop and would not consider this to be true finger "movement." (*Id.* at 101-102.) Apple argues that if a touch screen device did not discard input slop, the device would misinterpret a user's intent and be unable to distinguish between a tap and a swipe. (*Id.* at 102; CRB at 52.)

Samsung argues that none of the accused devices infringe because each is designed to discard initial input data that includes initial movement data. (RIB at 120.) Thus, Samsung argues the accused products do not meet the limitation "based on initial movement." (*Id.*) Samsung argues that although Apple asserts that movement detect as input slop is not "true finger movement" the claims of the '949 patent do not impose a "true finger movement" requirement. (*Id.*) Samsung argues that nowhere in the patent is initial movement described as excluding any initial input data. (*Id.*) Samsung argues that Apple's assertion that without discarding input slop it would be impossible for the devices to record a tap gesture is incorrect. (*Id.*) Samsung argues that the '949 patent discusses both tap and swipe gestures that never mentions the need to discard initial movement in order to distinguish between the two. (*Id.*) Samsung argues that there are other factors that can be considered instead and that choosing to discard movement as slop is an implementation choice not a requirement that impacts the ordinary meaning of the term "initial movement." (*Id.* at 120-121.) Samsung further argues that even if some initial input may be discarded is input slop Apple still fail to establish at the amount of initial input that is discarded in the accused products is not "initial movement." (*Id.* at 121.)

The Staff argues the one of ordinary skill in the art would have recognized that initial movement occurs after input slop, as it is necessary to account for input slop for the system to

function accurately. (SIB at 52.) The Staff argues that if a device did not discard input slop it would be impossible to determine between a tap and a swipe. (*Id.* at 52-53.)

Analysis

Claim 1 requires that the vertical screen scrolling heuristic and the two-dimensional screen translation heuristic determine whether to perform a vertical screen scrolling command or two-dimensional screen translation command "based on the angle of initial movement of the finger contact with respect to the touch screen." Per Order No. 16, the term "based on an angle of initial movement" is properly construed in accordance with its plain and ordinary meaning.

The evidence shows because "It is impossible for a user to be perfectly precise when using a touch screen," imprecise finger movements will be registered on the touch sensor when a user's finger contacts the touch screen on a touch screen device. (CX-2428C (Balakrishnan DWS) at Q&A 67.) Thus, the touch sensor will invariably detect slight movements (a.k.a., input slop). (*Id.*) To account for this phenomenon, the evidence shows that touch screen devices filter out signals that do not constitute genuine finger movement.[10] For example, when a user "taps" the touch screen on a touch screen device, the touch sensor will detect slight movements during the time the finger is touching the touch screen due to the imprecise stability of a user's finger. (*Id.*) If the device did not account for, and disregard, these undesired movements, the device would act in a manner that is contrary to the user's intent by immediately scrolling even though the user intended only to perform a "tap." (*Id.*) In fact, if a device does not take into account

---

[10] The evidence shows the '949 Accused Products account for certain "input slop" movements that the system determines do not reflect real finger movement by employing a slop threshold and filtering out finger movements and other noise that do not exceed the threshold. (CX-2428C (Balakrishnan DWS) at Q&A 104, 112.)

input slop, the evidence shows that the device would not be able to distinguish between a "tap" and a "swipe." (*Id.*) As the '949 patent itself includes embodiments that involve detecting a "tap" gesture as well as embodiments that involve detecting "swipe" gestures, by the same logic the invention of the '949 patent must account for input slop or the claimed invention would not be completely operational. (*See, e.g.*, JX-003 at 8:11-13, 19:36-41; CX-2428C (Balakrishnan DWS) at Q&A 67.)

The very purpose of discarding input slop is to ensure that the movement the system responds to is the actual initial movement of the user's finger, rather than electrical noise or unintended movement due to the imprecision in how the user's finger contacts the touch screen. (Tr. 1223:7-8, 1266:16-22.) As Dr. Balakrishnan convincingly testified, one of ordinary skill in the art would expect a touch screen to perform a preliminary check to account for this input slop and would not consider this to be true finger "movement." (*See* Tr. at 1219:3-1230:15; *see also* CX-2428C (Balakrishnan DWS) at Q&A 67, 71, 112.) Thus, I find for the reasons discussed above that in the context of the '949 patent, one of ordinary skill in the art at the time of the invention would not have considered input slop in determining the "initial movement of the finger contact." Accordingly, I find Samsung's argument not persuasive.

(3) Do the accused products employ heuristics for scrolling and a next item command?

The Parties' Positions

Apple argues that Samsung ignores my construction of the term "heuristic" and makes arguments based on a different meaning of "heuristic." (CIB at 110.) Apple argues that this is merely a disguised attempt to reargue claim construction. (*Id.*) Apple argues that Samsung's assertion that the accused products use algorithms and not heuristics cannot be squared with the

claims or the specification of the '949 patent. (*Id.*) Apple also argues (in Order No. 16), that I specifically concluded that "a person of ordinary skill in the art at the time of the invention was made would know an algorithm or rule to use to accomplish the claimed subject matter." (*Id.* at 111.) Apple argues that all source code is inevitably comprised at some level of rigid rules. (*Id.*) Apple argues that the '949 patent consistently and clearly states that the claimed heuristics are embodied in code on a computing device and thus Samsung cannot avoid infringement by arguing that its source code lacks heuristics. (*Id.*)

Samsung argues that the '949 Accused Products do not infringe because they lack "heuristics" because they apply a simple mechanical rule to determine whether to perform vertical screen scrolling or two-dimensional screen translation. (RIB at 122.) Samsung argues that a rule that

cannot be a heuristic because it does not assist in drawing inferences as required by the adopted claim construction. (*Id.*) Samsung also argues that a rule that displays the next photo in the Gallery application cannot be a heuristic because it too employs

(*Id.*) Samsung argues that these mechanical rules merely check if the measured value is (*Id.*) Thus, Samsung argues no inferences are made as the rules simply tell what should be done. (*Id.*)

The Staff argues that contrary to Samsung's assertion, in light of the claim construction of the term "heuristics," the '949 Accused Products running Android versions 2.2, 2.3, or 3.x employ rules regardless of how flexible or inflexible those rules may be. (SIB at 54.) The Staff also argues that the rules employed by the accused products make an inference about what command the user intended to trigger." (*Id.*) The Staff argues that the '949 Accused Products

running Android 4.0 also satisfy the next item heuristics limitation for the same reasons. (*Id.* at 55.)

Analysis

Although Samsung couches its argument in terms of a non-infringement position, I find Samsung is really attempting to re-argue claim construction. In Order No. 16, I construed the term "heuristic" to mean "one or more rules to be applied to data to assist in drawing inferences from that data." I believe that claim construction to be proper for the reasons discussed in Order No. 16 and thus, I am not going to revisit that claim construction. (*See* Order No. 16 ("Hereafter, discovery and briefing in this Investigation shall be governed by the construction of the claim terms in this Order.").) Contrary to Samsung's argument, nothing in my claim construction requires that the "one or more rules" be flexible and nothing in my claim construction prevents the "one or more rules" from being implemented by an algorithm. In fact, in my order construing claim terms I specifically concluded that "one of ordinary skill in the art at the time of the invention was made would know an *algorithm or rule* to use to accomplish the claimed subject matter." (Order No. 16 at 12 (emphasis added).)

As construed, a "heuristic" is "one or more rules to be applied to data ..." Based on the evidence of record I have no difficulty finding that the algorithms used in the '949 Accused Products consist of "one or more rules to be

applied to data to assist in drawing inferences from that data." CX-2428C (Balakrishnan DWS) at Q&A 81.) For example, the evidence shows that if the user's finger

, the Gallery application display the next photo, thereby effectively inferring from the finger movement that the user desired to view the next photo.

Accordingly, for the reasons discussed above, I find Samsung's argument not persuasive.

b. Claims 4, 5, 6, and 10

Claims 4, 5, 6, and 10 depend from independent claim 1 of the '949 patent. Dr. Balakrishnan testified in detail that the '949 Accused Products satisfy the additional limitations added by these dependent claims and thus, infringe claims 4, 5, 6, and 10 of the '949 patent. (CX-2428C (Balakrishnan DWS) at Q&A 123-135.) Samsung does not set forth any specific non-infringement arguments regarding these claims. Accordingly, based on Dr. Balakrishnan's undisputed testimony, I find that the '949 Accused Products infringe claims 4, 5, 6, and 10 of the '949 patent.

c. Claims 11-16

Claim 11 is an independent claim and asserted claims 12-16 depend from claim 11. Claim 11 is directed to a computer-implemented method that includes steps that are substantially the same as found in independent claim 1. Likewise, dependent claims 12-16 are analogous to claims 4-6 and 9-10. Dr. Balakrishnan testified in detail that the '949 Accused Products meet the limitations found in these claims and thus, infringe claims 11-16 of the '949 patent. (CX-2428C (Balakrishnan DWS) at Q&A 136-147.) Samsung does not set forth any additional non-infringement arguments regarding these claims beyond that which it asserted with regard to claim 1. Accordingly, based on Dr. Balakrishnan's testimony, and for the same reasons I

espoused with regard to claim 1, I find that the '949 Accused Products satisfy all of the elements of claims 11-16 of the '949 patent.

Because claims 11-16 are method claims, Apple must show not only that the '949 Accused Products meet all the limitations of the claims, but also that Samsung practices the method claims. Apple argues that Samsung directly infringes each of the asserted method claims by using or testing the '949 Accused Products in the United States. (CIB at 112.) Apple argues that by operating the accused products, Samsung employees practice the claimed methods and that because these employees are acting within the scope of their employment when they test the products the Samsung entities directly infringe. (*Id.* at 112-113.) Samsung does not dispute Apple's argument and thus I find based on the arguments presented by Apple that Samsung practices method claims 11-16 of the '949 patent. Accordingly, I find that Samsung directly infringes method claims 11-16 of the '949 patent.

Although I have found hereinabove that Samsung infringes method claims 11-16, Samsung's direct infringement cannot form the basis of a violation because the infringement (*i.e.*, the practicing of the method claims) did not occur at the time of importation. *See Certain Electronic Devices with Image Processing Systems, Component Thereof, and Associated Software*, 337-TA-724, Comm'n Op. at 13-14 ("We also interpret the phrase 'articles that – infringe' to reference the status of the articles at the time of importation. Thus, infringement, direct or indirect, must be based on the articles as imported to satisfy the requirements of section 337.") Apple's arguments to the contrary are disingenuous in light of the arguments it made to the Commission in Inv. 337-TA-724. (*Id.* at 11 (noting that Apple argued that practicing the patented method steps in the United States using the imported devices could not be a violation of

Section 337 absent a showing of indirect infringement).) Moreover, contrary to Apple' argument in this investigation, the Commission explicitly found in Inv. 337-TA-724 that "with respect to method claim 16 of the '146 patent, we find that Apple does not directly infringe the patented method when it imports the accused computers because the act of importation is not an act that practices the steps of the asserted method claim." Accordingly, I find Apple's argument that there can be a violation of Section 337 based on Samsung's direct infringement of method claims 11-16 of the '949 patent in the United States after importation not persuasive.

d. Claims 17-20

Claim 17 is an independent claim and asserted claims 17-20 depend from claim 17. Claims 17-20 are directed to a computer readable storage medium, but are otherwise analogous to claim 1, 4, 5, and 9 of the '949 patent. Dr. Balakrishnan testified in detail that the '949 Accused Products meet the limitations found in these claims and thus, infringe claims 17-20 of the '949 patent. (CX-2428C (Balakrishnan DWS) at Q&A 148-156.) Samsung does not set forth any additional non-infringement arguments regarding these claims beyond that which it asserted with regard to claim 1. Accordingly, based on Dr. Balakrishnan's testimony, and for the same reasons I espoused with regard to claim 1, I find that the '949 Accused Products infringe claims 17-20 of the '949 patent.

2. Indirect Infringement

Apple argues that Samsung indirectly infringes method claims 11-16 of the '949 patent by inducing others to infringe and by contributing to the infringement. (CIB at 112-116.)

a. Direct Infringement

Parties' Positions

Apple argues that the end users of Samsung's '949 Accused Products directly infringe claims 11-16 when they use the Browser and Gallery applications on the '949 Accused Products. (CIB at 114-115.) Apple argues that prove direct infringement, a complainant must prove that during the relevant period it is more likely than not that a person in the United States performed the claimed method. (*Id.* at 114.) Apple argues that there is sufficient circumstantial evidence that at least once an end user used the Gallery or Browser applications in an infringing manner. (*Id.* at 115.) Apple argues that the likelihood that at least one end user has performed the infringing functions at least once is overwhelming particularly in light of the explicit instructions provided explaining how to use the features and the large number of accused products sold. (*Id.* at 114-115.)

Samsung argues that Apple failed to prove direct infringement by a third party. (RIB at 122.) Samsung argues that Apple has only provided evidence that Samsung employees use the accused products in the allegedly infringing manner. (*Id.* at 123.) Samsung also argues that Dr. Balakrishnan admitted that he cites to no evidence of direct infringement by anyone other than Samsung employees. (*Id.*)

The Staff argues that end users of the '949 Accused Products practice the method claims of the '949 patent. (SIB at 56-57.)

Analysis

To prove indirect infringement of the method claims, either by inducement or contributory infringement, Apple must show that the method claims have been directly infringed.

Linear Tech. Corp. v. Impala Linear Corp., 379 F.3d 1311, 1326 (Fed. Cir. 2004) (citation omitted) ("There can be no inducement or contributory infringement without an underlying act of direct infringement."); *Dynacore Holdings Corp. v. U.S. Philips Corp.*, 363 F.3d 1263, 1272 (Fed. Cir. 2004) ("Indirect infringement, whether inducement to infringe or contributory infringement, can only arise in the presence of direct infringement...."). Direct infringement may be proven by either direct or circumstantial evidence. *Moleculon Research Corp. v. CBS, Inc.*, 793 F.2d 1261, 1272 (Fed. Cir. 1986) ("It is hornbook law that direct evidence of a fact is not necessary. 'Circumstantial evidence is not only sufficient, but may also be more certain, satisfying and persuasive than direct evidence.'") (quoting *Michalic v. Cleveland Tankers, Inc.*, 364 U.S. 325, 330 (1960)); *see also Alco Standard Corp v. Tenn. Valley Auth.*, 808 F.2d 1490, 1503 (Fed. Cir. 1986) ("Although the evidence of infringement is circumstantial, that does not make it any less credible or persuasive.").

Here, the evidence shows that Samsung provides user manuals that instruct the end users of its '949 Accused Products how to use the Gallery and Browser applications that are included in the '949 Accused Products. (*See* CX-2428C (Balakrishnan DWS) at Q&A 160.) The evidence shows that these manuals teach the end users, *inter alia*, the gestures that are recognized and used by the Gallery and Browser applications. (*Id.*) For example, the user manual for the Sidekick 4G SGH-T839 instructs users on navigating with the Browser application, stating, "To scroll through a website, sweep the screen with your finger in an up or down motion." (*See* CX-341 at 167.) Similarly, the user manual for the Sidekick 4G SGH-T839 instructs users on viewing pictures using the Gallery application, stating: "Touch and drag a picture to the left to see the next picture or to the right to see the previous picture." (*Id.* at 126.)

The evidence shows that all of the '949 Accused Products' user manuals contain similar instructions. (*See, e.g.*, CX-336-53, CX-356-62, CX-375-400, CX-416-31.)

In addition, the evidence shows that Samsung publicly demonstrates use of the '949 Accused Products in an infringing manner, including in videos posted to its Mobile's YouTube channel (*See* CX-281 at 6:57–7:06; *see also* CX-277 at 0:33–38.) Finally, the evidence shows that SEA directly instructs end users on how to use these products, including the use of the infringing Gallery and Browser applications, through its customer support staff. (CX-2557C (Merrill Dep.) at 71:15-75:9; CX-280 at 2:10, 4:00, and 5:00.)

To prove direct infringement, Apple must have proven that during the relevant period "more likely than not one person somewhere in the United States had performed the claimed method." *Lucent Techs., Inc. v. Gateway, Inc.*, 580 F.3d 1301, 1318 (Fed. Cir. 2009). In light of the large numbers of the '949 Accused Products sold by Samsung (*see* CDX-183C and CDX-184C (

) and the user manuals and demonstrations that teach end users the gestures that necessarily invoke the claimed heuristics, I find that the likelihood that at least one end user has performed the claimed method at least once is overwhelming. *See Toshiba Corp. v. Imation Corp.*, No. 2011-1204, slip op. at 11 (Fed. Cir. June 11, 2012) ("[W]here an alleged infringer designs a product for use in an infringing way and instructs users to use the product in an infringing way, there is sufficient evidence for a jury to find direct infringement."); *see also Certain Semiconductor Chips*, Inv. No. 337-TA-661, ID at 43 ("[E]vidence of extensive sales in the United States has been found sufficient to show direct infringement by end users that perform a claimed method when operating an accused product as the manufacturer intended.")

Accordingly, I find that Apple has proven direct infringement of the claimed methods by the end users of the '949 Accused Products.

b. Inducement

The Parties' Positions

Apple argues as Samsung has provided manuals instructing end users of the '949 Accused Products how to use functions that employ the claimed heuristics, by, for example, navigating with a browser in the Browser application or scrolling through pictures in the Gallery application. (CIB at 113-114.) Apple also argues that Samsung publicly demonstrates use of the '949 Accused Products in a manner that infringes claims 11-20 of the '949 patent. (*Id.*) Additionally, Apple argues that SEA directly instructs its customers through its customer support staff on how to use the accused products including use of the infringing Browser and Gallery applications. (*Id.* at 114.) Apple further argues that Samsung had actual knowledge of the 949 patent and of Apple's contentions that its products infringe the '949 patent. (*Id.*) Thus, Apple argues the evidence shows that Samsung induces its customers to infringe the '949 patent. (*Id.* at 114-115.)

Samsung argues that Apple has failed to prove the requisite elements of indirect infringement. (RIB at 122.) Samsung argues that Apple failed to prove direct infringement by any third party. (*Id.* at 122-123.) Samsung also argues that Apple failed to prove that it possessed the requisite knowledge and intent required to establish liability for inducement. (*Id.*) Samsung argues there is no evidence of specific intent to infringe and in fact to the contrary, the evidence shows that Samsung had a good faith belief that its products do not infringe the '949 patent and that the '949 patent is invalid. (*Id.* at 124.) Samsung also argues that Apple failed to

establish that the accused features are especially adapted for use in an infringement of the '949 patent and lack substantial non-infringing uses. (*Id.* at 122, 125.)

Staff argues that Samsung induces infringement of the claims by providing user manuals instructing its end users of its products to use the browser and gallery applications in a manner that infringes the method claims of the '949 patent. (SIB at 57.) The Staff argues that Samsung knew or should have known of the existence of the '949 patent as of and that its actions regarding instructing its end users would induce infringement of the asserted method claims. (*Id.*)

Analysis

I have already found, *supra*, that Apple has shown by a preponderance of the evidence that claims 11-16 of the '949 patent are directly infringed by the end users of the '949 Accused Products. Thus, the only questions that remain are whether Samsung's actions induced the infringing acts and whether Samsung knew or should have known its actions would induce actual infringement.

As discussed in detail, *supra*, Samsung provides manuals that instruct end users of the '949 Accused Products to use, *inter alia*, the Browser and Gallery applications in a manner that infringes claims 11-16 of the '949 patent. Additionally, as previously discussed, Samsung publically demonstrates in an infringing manner the use of the '949 Accused Products and provides direct instruction through its support staff to the end users on how to use the infringing Browser and Gallery applications. Thus, I find Samsung's actions induced the infringing acts of the end users of the '949 Accused Products.

Samsung admits that it had actual knowledge of the '949 patent and of Apple's contention that Samsung's products were infringing the '949 patent as early as . (JX-218C at 384 ( ); CX-406C at 15.)[11] Thus, I find that the evidence shows Samsung had knowledge of the '949 patent and Apple's general allegation of infringement regarding same at least as early as

Despite of having been on notice of the '949 patent and having been provided claim charts showing alleged infringement (at least as of the time of the Complaint), the evidence shows that Samsung continues to manufacture, import, and sell the '949 Accused Products. The evidence also shows that the Browser and Gallery applications in the '949 Accused Products are designed in such a manner that they cannot be fully used for their intended purposes without infringing claims 11-16 of the '949 patent. *See Water Technologies*, 850 F.2d at 668-69 (Inferring specific intent to cause infringement from a defendant's knowledge of the patent and control over the design or manufacturing of the product used for direct infringement.). The evidence further shows, as previously discussed, that Samsung instructs end users to use the Gallery and Browser applications in such a manner that necessarily requires invoking the claimed heuristics. *See Grokster*, 545 U.S. at 936 (Recognizing that providing instruction on

---

[11] In any event, Samsung was certainly aware of the '949 patent and Apple's specific infringement contentions as of the date they were served a copy of the Complaint in this investigation, which was August 2, 2011. *See Certain Inkjet Ink Cartridges With Printheads and Components Thereof*, Inv. No. 337-TA-723, Initial Determination, 2011 ITC LEXIS 1503 at *145 (June 10, 2011) (finding the knowledge requirement for contributory infringement satisfied based on service of the complaint).

how to engage in an infringing use "show[s] an affirmative intent that the product be used to infringe."). Accordingly, I find that Apple knew or should have known that its actions instructing and demonstrating to end users how to use the Browser and Gallery applications actively encouraged them to use the '949 Accused Products in a manner that infringes claims 11-16 of the '949 patent. Thus, for the reasons espoused above, I find that Samsung designs, manufactures, imports and sells the accused products with the specific intent to induce infringement of claims 11-16 of the '949 patent.

Accordingly, I find that Samsung actively induces infringement of claims 11-16 of the '949 patent in violation of 35 U.S.C. § 271(b).

c. Contributory Infringement

The Parties' Positions

Apple argues that Samsung contributes to the infringement of the accused products by its customers. (CIB at 115.)

(*Id.*) Apple argues that the relevant source code used by the '949 Accused Products has no purpose other than to practice the claimed heuristics and therefore has no substantial non-infringing use. (*Id.*) Apple argues that it is irrelevant that Samsung's accused devices as a whole can perform other non-infringing functions. (*Id.*) Apple argues that the relevant question is whether the source code has any substantial non-infringing use. (*Id.*) Apple argues that the accused features in the '949 Accused Products have no non-infringing use as it is not possible to perform a vertical screen scroll or two-dimensional screen translation in the browser application in the accused products or to move between pictures in the gallery

application in the accused products without infringing the '949 patent. Thus, Apple argues Samsung is liable for contributory infringement. (*Id.* at 116.)

Samsung argues that Apple did not prove contributory infringement because it failed to show that the accused components do not have substantial non-infringing uses and are especially adapted for use in an infringement of the patent. (RIB at 125.) Samsung argues that Apple does not even identify what the component is that is allegedly especially adapted for use in an infringement of the patent. (*Id.*) Samsung argues that all Apple identifies is the "source code discussed above," which is insufficient to meet its burden. (*Id.*)

The Staff argues that the evidence does not show that Samsung contributes to infringement of the asserted method claims. (SIB at 57.) In particular the Staff argues that Apple has failed to show that the accused products are especially adapted for use in an infringement of the '949 patent. (*Id.*) The Staff argues that although Apple asserts that the source code in the '949 Accused Products has no purpose other than to practice the claimed methods, the evidence shows the source code in the accused products exist in various forms and that neither type of source code is especially adapted for use in infringement of the '949 patent. (*Id.*)

Analysis

Under 35 U.S.C. § 271(c), a party is liable for contributory infringement if he "offers to sell or sells within the United States or imports into the United States ... a material or apparatus for use in practicing a patented process, constituting a material part of the invention, knowing the same to be especially made or especially adapted for use in an infringement of such patent, and not a staple article or commodity of commerce suitable for substantial noninfringing use." Apple

argues that the "material or apparatus" is "the portions of source code [in the Browser and Gallery applications] that control the scrolling and translation operations."[12] (CIB at 115-116; CRB at 56.) In support Apple relies on the testimony of its expert, Dr. Balakrishnan, who stated only that "[t]he source code discussed above, which Samsung has represented is used in its accused products, has no purpose other than to practice this method, and therefore has no substantial non-infringing use." (CX-2428C (Balakrishnan DWS) at Q&A 160.)
Dr. Balakrishnan's testimony is entirely conclusory and fails to explain in any detail how in fact the source code relied upon is adapted for use in an infringement of the '949 patent or why such source code does not have any substantial non-infringing use. Thus, I find Apple has failed to meet its burden of showing that "the portions of source code" are especially made for use in infringement of the patent, and have no substantial non-infringing uses.

Moreover, I disagree with Apple that the relevant "material or apparatus" is "the portions of source code" in the Browser and Gallery applications that control the scrolling and translation operations. Claim 11 requires functionality that is not present in the "the portions of source code" that control the scrolling and translation operations. For example, claim 11 requires "detecting one or more finger contacts with the touch screen display," however, the "portions of source code" relied on by Apple are not responsible for detecting one or more finger contacts with a touch screen display. Because the claims require more than just control of scrolling and translation operations, the relevant "material or apparatus" cannot be limited to the "portions of

---

[12] Apple asserts for the first time in its reply brief that the "portions of source code" it is referring to is the source code responsible for the "zoom, crop, and text selection features." Apple did not clarify this in its initial post-hearing brief and it is too late for Apple to do so on reply as it unfairly prejudices Samsung and the Staff.

source code." Rather, I find the "material or apparatus" is more properly characterized as the Browser and Gallery applications. With regard to the Browser and Gallery applications, the evidence shows that those applications have non-infringing uses that are substantial. (*See* RX-3636C (van Dam RWS) at Q&A 579; *see also* CX-0341 at 140, 162.) Accordingly, for this reason also, I find Apple has failed to prove that Samsung contributory infringes claims 11-16 of the '949 patent.

F. Technical Prong of the Domestic Industry Requirement

Parties' Positions

Apples alleges that each of its domestic industry products practices claim 1 of the '949 patent. (CIB at 116.) Apple argues that the Weather, Photos, and Safari applications in the Domestic Industry Products practice each and every limitation of claim 1. (*Id.* at 116-117.) In particular, Apple argues that in response to a user's swipe, the Mobile Safari application in the Domestic Industry Products will either execute a vertical screen scroll or two-dimensional screen translation based on the angle of initial movement. (*Id.* at 116.) Likewise, Apple argues that in response to a user's swipe, the Photos application in the Domestic Industry Products will implement a next item heuristic. (*Id.*) The Staff agrees. (SIB at 58-59.)

Samsung argues that the Domestic Industry Products do not practice claim 1 of the '949, because: (1) the Domestic Industry Products do not have a scrolling heuristic that is based on "initial movement"; and (2) the Domestic Industry Products do not employ heuristics for scrolling or a next item command. (*See* RIB at 125-127.)

Analysis

Dr. Balakrishnan testified in detail that Apple's iPad, iPad2, original iPhone, iPhone 3G, iPhone 3GS, iPhone 4, iPhone 4S, iPod Touch 3G, and iPod Touch 4G (collectively "Domestic Industry Products") running both Apple iOS 3 and iOS 5 practice claim 1 of the '949 patent. (*See* CX-2428C (Balakrishnan DWS) at Q&A 34-38, 44-45, 47-79; CDX-961C.) Specifically, Dr. Balakrishnan testified that the '949 patent is practiced by each of the Domestic Industry Products through at least the operation of the Mobile Safari, Weather, and Photo applications. (*Id.* at Q&A 44.) Dr. Balakrishnan based his opinion on his inspection and testing of the operation of those applications in the Domestic Industry Products, his analysis of the source code files used by the applications, and documents produced by Apple showing certain features of these products. (*Id.* at 45.)

As discussed in more detail below, I am not persuaded by Samsung's arguments. Thus, in light of Dr. Balakrishnan's testimony I find that Apple has proven by a preponderance of the evidence that the Domestic Industry Products practice claim 1 of the '949 patent.

1. Do the domestic industry products determine a vertical screen scrolling command based on "initial movement"?

Parties' Positions

Apple argues that in the Mobile Safari application, a user can execute a vertical screen scroll by swiping their finger in a roughly vertical direction. (CIB at 116.) Apple argues that the fact that the Domestic Industry Products discard input slop does not change the fact that the products meet the limitation "based on the angle of initial movement" because one of ordinary skill in the art would appreciate that input slop does not count as "movement" for purposes of the patented invention. (*Id.* at 117.) The Staff agrees. (SIB at 58-59.)

Samsung contends that the Domestic Industry Products do not determine a vertical screen scrolling command based on initial movement because the products ignore initial movement within a "hysteresis" value of 10 pixels. (RIB at 125-126.)

Analysis

Dr. Balakrishnan testified in detail that the Domestic Industry Products determine a vertical screen scrolling command based on initial movement. (*See* CX-2428C (Balakrishnan DWS) at Q&A 63-71.) Samsung's argument that the Domestic Industry Products do not determine a vertical screen scrolling command based on initial movement because the products ignore initial movement within a "hysteresis" is really just a repeat of its non-infringement argument regarding input slop. Accordingly, I find for the same reasons I discussed with regard to Samsung's non-infringement position that one of ordinary skill in the art at the time of the invention would not have considered input slop to be initial movement.

Thus, based on the testimony presented by Apple, I find that Apple has proven by a preponderance of the evidence that the Domestic Industry Products determine a vertical screen scrolling command based on "initial movement."

2. Do the domestic industry products employ heuristics for scrolling and a next item command?

Parties' Positions

Apple argues that the next item heuristic is implemented in the Photo application in the Domestic Industry Products. Apple argues that that the Domestic Industry Products employ rules that constitute heuristics despite the fact that they are embodied in algorithms with no flexibility. (*Id.* at 117.) Apple argues that Samsung's argument that its products don't meet this

limitation is based on an overly narrow interpretation of the term "heuristic" that is contrary to the claim construction adopted for that term. (*Id.*) The Staff agrees. (SIB at 59.)

Samsung argues that Apple's products do not practice the '949 patent because they do not employ heuristics, but rather mechanical rules that use predetermined constants to determine whether to scroll vertically or in two dimensions. (RIB at 126-127.)

Analysis

Dr. Balakrishnan testified, in great detail, how the Domestic Industry Products employ heuristics for vertical screen scrolling and next item command. (*See* CX-2428C (Balakrishnan DWS) at Q&As 44-46 and 62-66.) Samsung's argument that the Domestic Industry Products do not employ heuristics is a mirror of its non-infringement argument. Accordingly, for the same reasons I discussed with regard to Samsung's non-infringement position, I find that the algorithms used by the Domestic Industry Products to interpret the user's finger movement as either invoking a vertical screen scrolling command or next item command are heuristics.

Thus, based on the testimony of Dr. Balakrishnan, I find that Apple has proven by a preponderance of the evidence that the Domestic Industry Products use heuristics to determine whether to perform a vertical screen scrolling command or next item command.

G. Validity

1. Anticipation

a. Wakai Patent and Wakai Application

The Parties' Positions

Apple argues that Wakai does not anticipate because Wakai does not disclose a two-dimensional screen translation command or determining that finger contacts correspond to this

command. (CIB at 122.) Apple argues that Wakai does not disclose a two-dimensional translation, but instead discloses what its expert calls a screen rotation command. (*Id.* at 123.) Apple argues that given its ordinary meaning, "rotation" would not be considered a type of two-dimensional translation by one of ordinary skill in the art. (*Id.*) Moreover, Apple argues that the '949 patent itself uses rotation to mean something different than two-dimensional screen translation. (*Id.* at 124.) Apple argues that nothing in the specification's description of rotation indicates that the applicants thought it was a kind of two-dimensional translation. (*Id.*) Further, Apple argues that during one of the two reexamination proceedings for the '949 patent the patent examiner explicitly stated that a rotational transformation is not a two-dimensional screen translation. (*Id.*) The Staff agrees. (SIB at 63.)

Samsung argues that claims 1, 4-6, 11, 14-17, and 20 are anticipated by the Wakai patent and the Wakai application.

Analysis

Samsung argues that claims 1, 4-6, 11, 14-17, and 20 of the '949 patent are anticipated by U.S. Patent No. 7,138,983 ("the Wakai patent") and U.S. Patent Publication No. 2002/0036618 ("the Wakai application"). In support, Samsung relies primarily on the testimony of its expert, Dr. van Dam, who testified in detail that the Wakai patent and Wakai application anticipate many of the asserted claims of the '949 patent. (*See* RX-3448C (van Dam DWS) at Q&A 229-297, 326-329.)

The Wakai patent was filed on January 26, 2001, which is before the September 6, 2006, effective filing date of the '949 patent. (*See* RX-606.) Thus, the Wakai patent is prior art under 35 U.S.C. § 102(e). The Wakai application was published on March 28, 2002, which is more

than one year prior to the September 6, 2006, effective filing date of the '949 patent. (*See* RX-355.) Thus, the Wakai application is prior art under 35 U.S.C. § 102(b). The Wakai patent and Wakai application share an identical disclosure and thus Samsung's anticipation arguments apply equally to both references. Accordingly, I will discuss the Wakai patent and Wakai application together and refer to them collectively as "Wakai."

Every asserted claim of the '949 patent requires heuristics that determine whether to perform a vertical screen scroll command or two-dimensional screen translation command based on one or more finger contacts. (*See e.g.*, JX-003 at 122:37-123:2; 123:12-17, *etc.*) Samsung contends that Wakai discloses a screen content rotation operation that causes screen content to move in two dimensions about a fixed center of rotation and that this meets the construction of the phrase "two-dimensional screen translation." (RIB at 128.) I disagree.

In Order No. 16 I construed the phrase "two-dimensional screen translation" to mean "movement of screen content in two dimensions." In the context of the '949 patent, however, the evidence shows that one of ordinary skill in the art at the time of the invention would not have understood "movement of screen content in two dimensions" to include rotation. (CX-2591C (Balakrishnan RWS) at Q&A 82.) Instead, the evidence shows that one of ordinary skill in the art would have understood that in a "two-dimensional screen translation" the pixels being translated will appear to move in the same direction and at the same time along two dimensions. (*Id.*) Even Samsung's expert, Dr. van Dam, testified that given its ordinary meaning, "rotation" would not be considered a type of two-dimensional translation by one of ordinary skill in the art. (Tr. at 1595:10-1596:16.) The prosecution history also confirms that rotation is not an example of translation as during one of the reexaminations of the '949 patent,

the examiner stated that "a rotational transformation is not a 'two-dimensional screen translation.'" (CX-284 at APL-ITC796-X0000003740.) Furthermore, claim 7 of the '949 patent, which depends from claim 1, adds a limitation that requires a heuristic where a contact comprising a simultaneous two-thumb twisting gesture corresponds to a 90° screen rotation command. (JX-003 at 123:30-33.) Thus, the '949 patent itself distinguishes between rotation and two-dimensional screen translation.

Accordingly, for the reasons discussed above, I find that Wakai fails to disclose a "two-dimensional screen translation" as required by claims 1, 4-6, 11, 14-17, and 20. Because Wakai does not disclose every limitation of the claims, I find that Wakai does not anticipate claims 1, 4-6, 11, 14-17, and 20 of the '949 patent.

b. Westerman Reference

The Parties' Positions

To understand Westerman, Apple explains its background as follows:

> The Westerman thesis discusses a touch pad that Wayne Westerman developed while a graduate student at the University of Delaware. (RX-2591C (Balakrishnan) at 15-17, Q31-33.) As Dr. Van Dam acknowledged, the Westerman thesis spans 333 pages, and describes research with the goal of "build[ing] a touch pad that could replace both the keyboard and the mouse on a computer." (Tr. at 1550:8-12.) Much of the thesis describes "how the system can sense what's happening when the user puts multiple fingers and, perhaps, even the palms of both hands on the touch pad at the same time." (*Id.* at 1552:2-8.) Tracking the movement of multiple fingers at the same time was complex in 1999, and remains complex to this day. (*Id.* at 1552:15-1553:5.) Sophisticated tracking of the location and movement of multiple fingers was the primary focus of the Westerman thesis. (*Id.* at 1554:1-12.)

(CIB at 119.)

Apple notes Westerman was disclosed to the PTO during two different requests for reexamination of the '949 patent and both times the examiner found the Westerman reference did not disclose elements of the '949 patent's claims. (*Id.*)

Apple argues that the Westerman thesis does not anticipate the claims of the 949 patent, because the thesis fails to disclose the claimed heuristics required by the claim language. (CIB at 119-122.) Specifically Apple argues that the Westerman thesis does not disclose a heuristic for distinguishing between a two-dimensional screen translation command and a vertical screen scrolling command. (*Id.* at 119-120.) Apple argues that at most Westerman discloses a four finger gesture and that even if this gesture was interpreted to be a two-dimensional screen translation command Westerman still fails to disclose a vertical screen scrolling command, let alone a rule to distinguish between them. (*Id.* at 120.)

Apple asserts that: Dr. Van Dam focuses on a single paragraph from Chapter 5 of Westerman. (*Id.*) This paragraph states, in its entirety:

> Like the recent dual-pointing-stick bulldozer-interface of Zhai *et al.*, the hand motion extractor presented in this chapter will try to strike a compromise between integrity and separability. The motion filters will pass simultaneous motions in multiple components or degrees of freedom which are truly in diagonal directions, thus allowing fast manipulation across shortest path diagonals. But when one of the rotation, scaling, or translation degrees of freedom dominates, indicating the direction of motion is nearly along an axis, the non-dominant components will be suppressed so that control occurs exactly along the axis.

(Id., citing RX-1266C at 264-265.) Apple then argues:

> As Dr. Balakrishnan has explained, this paragraph describes the ways Westerman's system analyzed movements of the hands and fingers on the touch pad, not what commands are executed or what transpires on the screen as a result of the finger movement. The passage states that "[t]he motion filters will pass simultaneous motions in multiple components or degrees of freedom." (CX-2591C (Balakrishnan) at 19-23, Q40-45.) Dr. Van Dam confirmed on cross-

> examination that these motion filters analyze hand motion, as opposed to screen motion. (Tr. 1558:8-1562:18.)

(CIB at 120.)

Apple argues that the passage in the Westerman thesis that Samsung's expert relies on is admittedly ambiguous and thus cannot support a finding of anticipation by clear and convincing evidence. (*Id.* at 120-121.) Apple argues Dr. van Dam agrees the passage it discussed from Chapter 5:

> . . . simply involves the ways in which the hand motion extractor will filter out certain types of hand motions. There is nothing in this passage to suggest that certain commands should be treated as a two-dimensional screen translation command or a one-dimensional vertical screen scrolling command. Indeed, this passage does not involve any screen "commands" at all. (CX-2591C (Balakrishnan) at 18-23, Q40-45.)

(*Id* at 121.) Hence it was wrong of Dr. van Dam to say of person of ordinary skill in the art would interpret "nearly along an axis" language from Westerman to mean motion on the screen is occurring exclusively on either a horizontal or vertical axis. (*Id.*)

Apple further argues that the Westerman thesis fails to disclose a touch screen, as required by each of the asserted claims. (*Id.* at 122.) Apple argues that Westerman only discloses using gestures on a system using a touch pad. (*Id.*)

Samsung argues that all asserted claims of the '949 patent are anticipated by the Westerman Thesis. (RIB at 129.) Further, Samsung alleges that Apple has conceded Westerman meets every limitation of the '949 patent but for two, *i.e.*, "(1) the existence of a touch screen ; (2) the existence of a vertical screen-scrolling command, and by implication, the existence of a heuristic distinguishing between such a command and a two-dimensional screen translation command. (*Id.*) Samsung also contends that even though Westerman Thesis is complex, that

does not change that it is anticipatory prior art because a hypothetical person of ordinary skill in the art "to which the claimed subject matter pertains would, of necessity have the capability of understanding the scientific and engineering principles applicable to the pertinent art"); *In re Gorman*, 933 F.2d 982, 986 (Fed. Cir. 1991). (RIB at 129.)

Samsung alleges Westerman expressly discloses a touch screen and even has a section entitled "Touch Pads and Screens." (RIB at 129-130.) Moreover, Samsung alleges Dr. Westerman discussed efforts to extract "hand or finger motion on a proximity-sensing surface such as a touchpad or touch screen." in his paper.[13] (RIB at 130.)

Samsung also alleges that Westerman discloses a "scrolling command," and moreover, "describes the mapping of a particular gesture to that scrolling command." (*Id.*) While conceding Apple disputes Westerman does not teach vertical scrolling, Samsung argues Westerman determines screen movement based on whether any four degrees of freedom, *i.e.*, horizontal translation, vertical translation, rotation, or scaling dominates to such a degree as to suppress the other degrees of freedom. (*Id.*) Samsung argues that if the movement of the hand

---

[13] I note the entire context of the language from Dr. Westerman that Samsung quotes is:

> Surprisingly, no one is known to have derived more than 2-DOF of control from hand or finger motion on a proximity-sensing surface such as a touchpad or touch screen. This can probably be attributed to the small form factor of touchpads and to the scarcity of multi-touch sensing technologies for independently weighting and filtering motions of multiple fingers. This chapter will present techniques for weighting and filtering motions of particular fingers to integrally extract rotation and scaling degrees of freedom from unbalanced finger motions.
>
> (RX-1266C at 225.)